Operating and mounting manual
Double safety shut off valve
gas – pneumatic valve
PX

Contents

1.0 General Remarks
- 1.1 Valve data
- 1.2 Application

2.0 Danger Notices
- 2.1 Safety terms
- 2.2 Safety notice
- 2.3 Qualified staff
- 2.4 Unauthorized modification and spare part production
- 2.5 Unauthorized operation
- 2.6 Safety information for the use in explosion-prone areas guideline 2014/34/EU

3.0 Handling
- 3.1 Transport
- 3.2 Storage
- 3.3 Handling before mounting

4.0 Product Description
- 4.1 Function
- 4.2 Technical data
- 4.3 Marking

5.0 Installation
- 5.1 Warning of dangers during installation, operation and maintenance
- 5.2 Installation

6.0 Operation
- 6.1 Commissioning
- 6.2 Shutting down
- 6.3 Maintenance
- 6.4 Putting back into operating

7.0 Troubleshooting
- 7.1 Detection of defects
- 7.2 Troubleshooting plan

8.0 Dismantling of the Valve
- 8.1 Replacement of wear parts V1 and V2

9.0 Warranty

10.0 Explanations on Codes and Directives

11.0 Drawings
- 11.1 Sectional drawing
- 11.2 List of parts
- 11.3 View drawing

12.0 Declaration of Conformity

1.0 General Remarks

This operating manual includes instructions to assemble and operate the valve in the prescribed and safe way. **Additionally and accordance with the solenoid drive of the control valve (805), the relevant manufacturer`s operating instructions (BTA) must be taken into consideration.**
If any difficulties appear that can not be solved by means of the operating manual, further information may be demanded from the manufacturer.
This operating manual is in accordance with the relevant valid EN safety standards and the valid prescriptions and rules of the Federal Republic of Germany.
If the solenoids are used abroad of the FRG, the operator and/or the person who is responsible for the plant concept must take care that the valid national rules are met. The manufacturer reserves the right of any technical change and improvement. The use of these operating instructions supposes the qualification of the user according to paragraph 2.3 “qualified staff”.
The operating staff must be trained in accordance with the operating instructions. The operating manual must always be available at the location where used.

1.1 Valve data

Manufacturer:
UNI Geräte E. Mangelmann
Elektrotechnische Fabrik GmbH
Holtumsweg 13
D-47652 Weeze
Phone: +49 (0) 2837/9134-0
Fax: +49 (0) 2837/1444
E-Mail: info@uni-geraete.de
Website: www.uni-geraete.de

Designation
Directly functioning, currentless closed, spring double safety shut off valve with pneumatic drive.

Type test acc. to EU/2016/426 product id. nr. CE-0085CR0022
DIN EN 16678 Gr. 2

Working pressure: PX… 10-… 0 – 10 bar
PX… 16-… 0 – 16 bar

Ambient temperature: -20°C to + 60°C with NBR sealing
0°C to + 60°C with FKM sealing

Medium temperature: -20°C to + 60°C with NBR sealing
0°C to + 60°C with FKM sealing

Fitting position: arbritary

Switching cycles: 500 cycles/h

Flange connection measures acc. to DIN EN 1092-2 / ANSI

Flange DN Flange ANSI	PN	50 2"	65 2 ½"	80 3”	100 4”	150 6”	Test pressure (*) PT
PX… 10-…	10	-	-	-	-	X	PT 15
PX… 16-…	16	X	X	X	X	-	PT 24

(*) Test pressure to perform leakage test "NO FUNCTION TEST"
X Type test acc. to EU/2016/426, **O** Acceptance test certificate 3.2 possible, - not available,

Control medium: air, nitrogen
-20°C to + 60°C
Control pressure: min. –control pressure 4 bar
max. –control pressure 10 bar
Electric connection control valve: Notice instructions on type plate of control valve.

1.2 Application

The UNI Geräte gas – pneumatic valve PX are used as automatic safety shut off valves to secure, to limit, shut-off and release gas and air supply at main shut-off devices or in front of gas burners e.g. acc. to EN 746-2.

The valves are suitable for gases of the 1st, 2 nd and 3 rd gas families to G260 and for neutral gases and as a variant with material design for aggressive gases such as e.g. biogas, sewage plant gas or dump gas to G262.

If used in other cases, the operator must carefully check if construction/design of valve, accessories and materials are suitable for the new application. The range of application is subject to the responsibility of the plant planner. The service life of the valve is 20 years.

2.0 Danger Notices

2.1 Safety terms

The signal terms DANGER, CAUTION and NOTICE are used in this operating manual in case of notices concerning special dangers, or for unusal information, requiring a special marking.

DANGER! means that in case of non-observance there is danger to life and/or considerable damage.

CAUTION! means that in case of non-observance there is danger of injury and/or damage.

NOTICE! means that attention is drawn to technical correlations/connections.

Observance of other, not especially marked notices concerning transport, assembly, operation and maintenance and other data (in the operating manual, product documentation and at the unit itself) is also essential, in order to avoid disturbances that might affect direct or indirect damage to property or injury to persons.

2.2 Safety notice

Non observance of safety instructions can lead to loss of any claim for damages.

Non observance can lead to the following mentioned dangers:

- Failure of important functions of the valve/plant
- Endangering of persons by electrical or mechanical influences.
- Protection against accidental contact for moving parts may not be removed as long as the valve is in operation.
- Leakage of dangerous media (e.g. explosive, toxic, hot) must be removed in the way that there is no danger for persons or environment. Laws and regulations must be observed.

2.3 Qualified staff

These are persons who are familiar with erection, assembly, starting, operation and maintenance of the product and who have special qualifications acc. to their activities and functions, e.g.:

- Instruction and obligation to carry out and meet all regional and in-house orders and requirements.
- Education or instruction according to the safety engineering standards in use and maintenance of adequate safety and working protection equipment.
- Training in first aid.

2.4 Unauthorized modification and spare part production

Modification or changes of the valve are only allowed after agreement of the manufacturer. Original drawings and accessories authorized by the manufacturer are for safety purposes. The use of other parts or unauthorized changes at the valve by third persons may cancel and abolish the manufacturer's liability for resulting consequences.

2.5 Unauthorized operation

Operational reliability of the delivered valve is only guaranteed in case of determined use in accordance to paragraph 1 of the operating manual. **The application limits mentioned on the type sign may on no account be exceeded.**

2.6 Safety information for the use in explosion-prone areas guideline 2014/34/EU

- The temperature of the medium must not exceed the respective temperature class, and respectively, the respective maximum permitted medium temperature as per operation guideline.
- If the valve is heated (e.g. heating jacket), care must be taken, that the specified temperature class is kept in the time.
- The valve must be connected to the ground.
  In the case most simple this can be realized via pipe screws by means of tooth disc.
  Otherwise the connection to the ground must be implemented by other measures e.g. cable links.
- Control valves, electrical and electrical/mechanical drives as well as sensors must undergo a separate conformity check as per ATEX. In doing so the respective safety and explosion protection information in the operation instructions are to taken into special consideration.
- Any modifications whatsoever to the valve are not allowed. The ATEX approval is void with immediate effect if the valve is modified without prior authorisation (even including painting).
- UNI-Geräte GmbH must be consulted before any modifications are made.

Furthermore we point out the guideline ATEX 118a, which include the minimum regulations for the improvement of the health-related situation and the safety of the employees, who might be jeopardized by an explosive atmosphere

3.0 Handling

3.1 Transport

For any transport works, the generally recognised technical rules and standards as well as rules for prevention of accidents must be observed.

In case of transport, storage and stopping, the flange protection caps must be mounted at both valve flanges.

The goods to be transported must be carefully treated. During transport, the valve must be protected against strokes, impacts or vibration. The coat of lacquer may not be damaged. Transport temperature is –20°C up to +60°C.

Never transport the valve at pneumatic drive piping/ tubing or components. Lifting and transport of the valve only at the handling device.

Transport the valve in a box or on a pallet with soft base and it smoothly on even floor. **Never put valve on the piping/ tubing or its components.**

The goods must be checked on completeness and transport damage. See also section 9.0

3.2 Storage

If the valve is not installed immediately after delivery, it must be stored properly.

- Storage temperature -20°C up to +60°C, dry and clean.
- The lacquer protects against corrosion in neutral dry atmosphere. Do not damage colour.

- In humid rooms, a drying agent or a heating resp. is necessary because of condensation of water.

Requirements according to DIN 7716 (products made of caoutchouc and rubber) must be met.

3.3 Handling before mounting

- In case of valve with protection caps, they must be removed before being mounted!
- Protect against atmospheric influences such as humidity.
- Appropriate treatment protects against damage

4.0 Product Description

Double safety shut-off valve acc. to DIN EN 13611 and DIN EN 16678 with pneumatic drive. The drive is actuated by a 3/2 way control valve with solenoid drive, type 10-EVD 2 or 10-EVD 2/2401

The sectional drawing picture 1 in Fig. 11.0 shows the valve construction.

4.1 Function

When opening the 3/2 way control valve (805) the control medium flows via the connection 3 → 2 under the drive piston (217). The control medium pushes the drive piston (217) against the pressure spring (503) and opens- via the valve spindle (205)- the balance piston (220) or valve disk (200) that is pressure impinged. The valve is open.

The valve closes in case of shut-off, failure or interruption of power energy to control valve (805). The compressed Air will blow off over the control valve (805).

4.2 Technical data

Opening times: < 1s
Closing times: < 1s

Drive types and air consumption in standard litre (NL) per connection at 4 bar control pressure.

Flange DN **Flange ANSI**	**50** **2“**	**65** **2 ½“**	**80** **3”**	**100** **4”**	**150** **6”**
PX..-4...	1NL	1NL	2NL	3NL	6NL

Air consumption for 10 bar, multiply control pressure table values by 2,2.

Max. valve loading by pipe power to DIN EN 13611

The indicated moments may not work longer than 10s.

DN		**50**	**65**	**80**	**100**	**150**
Bending	**Nm**	1100	1600	2400	5000	7600

Starting torque, pipe screws greased

DN		**50**	**65**	**80**	**100**	**150**
Torque	**Nm**	50	50	50	80	160

Starting torque, product screws and nuts greased

Screw		**M6**	**M8**	**M10**	**M12**	**M16**	**M20**	**M24**
Torque	**Nm**	5	11	22	39	70	110	150

4.3 Marking

The type sign on the pneumatic drive has the following information:

- Fabricator
- Valve type, nominal width, pressure and temperature indication, fitting position
- Year of construction/ production no.
- Product ID No. to EU/2016/426
- Valve class and valve group acc. to DIN EN 13611, DIN EN 16678

- CE-sign and no. of relevant location to 2014/68/EU
- Fluid group and test pressure PT to 2014/68/EU
- Pneumatic drive type
- Control medium, p_{min} and p_{max} for control medium.

Refer also to section 10.0.

5.0 Installation

5.1 Warning of dangers during installation, operation and maintenance

DANGER!
Safe operation of the valve can only be guaranteed if it is installed, commissioned and maintained by qualified personnel (see point 2.3 “Qualified staff“) correctly and in observance of the warnings in this operating manual. Apart from that, the operation safety order and the qualified use of tools and protection equipment must be guaranteed. The operating instructions for the valve must be observed during all work on or with the valve. Failure to observe these instructions may result in injury or in damage to the valve or other installations.

When the valve is used as a final sealing element, a safety precaution e.g. blanking disc, blind flange, etc., in accordance with the code of practice of the German Technical and Scientific Association for Gas and Water (DVGW) is recommended during all repair work.

5.2 Installation

Apart from the general installation guidelines, the following points should be observed:

NOTICE!
- Remove the flange covers.
- The inside of the valve and the pipeline must be free from foreign particles.
- Observe the installation position in relation to the flow direction, see markings on the valve.
- Centre gaskets between the flanges.
- The connecting flanges must be aligned.
- Ensure that none of the components is strained during installation.
- The valve must not be used as a fixed point; it is supported by the pipework system.
- Protect valves from soiling, particularly during construction work.
- Thermal expansion of the pipework must be equalized using compensators.

In accordance with DIN EN 13611 and DIN EN 16678 a dirt trap must be installed upline of any safety shut-off device. The mesh size of the screen must be smaller than 1.5 mm and not allow a test mandrel of 1 mm diameter to pass. Where two safety shut-off devices are combined to form a group, one dirt trap installed upstream of the first valve is sufficient. The dirt trap must be installed not too far upline of the first valve. The UNI-Geräte dirt traps of the SFR Series are approved for use together with the gas pneumatic valves in accordance with EU/2016/426.

The valve can be installed with vertical or horizontal pneumatic drive. The solenoid drive of the control valve should preferably be installed with vertical drive. The control air must be connected at connection 3. We recommend an air filter in front of the control valve. Mesh size 40 µm.

NOTICE!
Please observe the control valve operating instructions.

6.0 Operation

DANGER!
Before commissioning a new installation or before starting up an installation again after repairs or modifications, ensure:

- The proper completion of all installation and assembly work!
- Commissioning only by “qualified staff” (see point 2.3).
- Installation or repair of existing guards and protection equipment.

6.1 Commissioning

- Before commissioning, check the data on material, pressure, temperature and flow direction with the layout plan of the pipework system.
- Depending on the field of application, the local regulations have to be observed, e.g. the operation safety order.
- Residues in the pipework and the valve (dirt, weld beads, etc.) will inevitably result in leaks.
- Leakage inspection of the installed valve.

6.2 Shutting down

- Depending on the field of application, the local regulations have to be observed, e.g. the operation safety order.

6.3 Maintenance

Gas – pneumatic valves have to be checked at regular intervals for proper function and internal leak tightness. The intervals for regular inspections have to be defined by the operator according to the operating conditions. UNI-Geräte recommends an internal visual inspection once a year and an overhaul of the valve after 2 years or after the following number of switching cycles at the latest:

Application temperature	≤ DN 80	≤ DN 150
≤ 25°C	75 000	25 000
> 25°C	25 000	25 000

Repair or maintenance works at the manufacturing company (UNI- Geräte)

- Valves and fittings must be delivered clean and free from substances which are harmful to health or to the environment.

6.4 Putting back into operation

When putting a valve back into operation, ensure that all the necessary steps described in section 5.2 (Installation) and section 6.1 (Commissioning) are repeated.

7.0 Troubleshooting

7.1 Detection of defects

DANGER!
Be sure to observe the safety instructions during troubleshooting.

If the malfunctions cannot be remedied using the following ***“Troubleshooting plan (7.2)”*** please contact the manufacturer.

In the event of faults in the function or operating behaviour of the valve, check whether the installation work was carried out and completed as described in this operating manual.
Depending on the field of application, the operation safety order must be observed.

Check the data on material, pressure, temperature, voltage and flow direction with the layout plan of the pipework system. In addition, check whether the operating conditions correspond to the technical data in the data sheet or on the rating plate.

7.2 Troubleshooting plan

Malfunction	Possible causes	Remedy
No flow	Pneumatic drive does not open	Switch on control valve (805)
		Check control pressure
		Clean filter control line, if necessary
	Working pressure too high	Compare working pressure with the data on the rating plate
	protective caps were not removed	Remove protective caps
Low flow rate	Contaminated strainer	Clean / exchange sieve
	Clogging in the pipework system	Check pipework system
Valve leaking at seat, no internal tightness	Valve seat gasket (400) or valve seat (100) damaged by external particles	See section 8 or replace valve
No external tightness	Gaskets damaged	See section 8 or replace valve
Valve opens too slowly	Soiled exhaust plug	Clean/exchange exhaust plug
	Control pressure too low	Check control pressure
Valve closes too slowly	Dirt in control line	Clean sound absorber (600)
		Clean vent line
	Reduced conductor cross sections	Replace folded control lines
Valve does not close	Control valve does not close	Check, if residual voltage is aligned
	Dirt in control line	Clean sound absorber (600)
		Clean vent line
	Reduced conductor cross sections	Replace folded control lines
Flange fracture (valve/ pipework)	Screws not tightened uniformly, mating flanges not aligned	Align pipework. Install new valve

NOTICE!
Observe section 9.0 before all installation and repair work!

Observe section 6.4 when putting the valve back into operation!

8.0 Dismantling of the Valve

In addition to the general installation guidelines and the operation safety order, the following points must also be observed:

DANGER!

- Depressurised pipework system
- Cooled medium
- Emptied installation
- Vent pipework systems containing corrosive, inflammable, aggressive or toxic media
- Have dismantling work carried out only by qualified staff (see point 2.3)

8.1 Replacement of wear parts V1 and V2

Shut down the valve as described in section 6.2.

Switch off the control valve (805) and the dismantling the tubing between control valve and actuator.

DANGER!
Valve is under spring tension. Minimum two screws (910/1) has to be installed in opposite.

Loose two opposite screws (910/1) with feather ring (906/3) and replace with to thread rods (ISO 4032) length see table.

Actuator	P80	P100	P120	P160
Thread rod	M12 x 250	M12 x 250	M12 x 250	M16 x 250
Nut	M12	M12	M12	M16

The nuts on the thread rods fasten hand screwed. After that you could lose the other screws (910/1) with feather rings (906/3).
Than loose the nuts on the thread rods slowly against the spring tension.

NOTICE!
The housing flange (108) is pressed with spring tension against the nuts of the thread rods.

Thread rods could loose with the housing flange (108) and the wear parts could be removed.

DANGER!
Opening the wear part.
The wear part is under spring thread and it is not allowed to be open

Replace the complete wear part for Valve 1 (V1) and Valve 2 (V2).

NOTICE!
In the spare part kit is a complete wear part with sealing's for V1 and V2.

During the visual inspection, pay attention to the following points:
- Damage to the valve seat (100).
- Damage to the valve sealing elements
- Residues in sound absorber(600)

In case of damages at the valve seat exchange the complete pneumatic valve.
Silencer (600) at control valve (805) has to be cleaned.

Assemble the valve in the reverse order to the dismantling.

CAUTION!
O-Ring (403/1) from the spare part kit, has to be accordingly lubricate with Staburags N32 or and a comparable Lubricate (DVGW-Approval) and install. During the mounting have a look to correct placement of the O-Ring.

Examine the valve for internal and external leaks in accordance with DIN EN 12266 and DIN EN 16678 and finally carry out a function test.

9.0 Warranty

Scope and period of the warranty is specified in the edition of the "General Terms of Business of the UNI-Geräte E. Mangelmann Elektrotechnische Fabrik GmbH" valid at the time of delivery or else in the purchase agreement.

We warranty that the valve is free from faults in line with the state of the art and for the confirmed field of application.

No warranty claims will be accepted for damage resulting from improper use or failure to observe these operating and installation instructions, the statutory accident prevention regulations, the EN, DIN and VDE standards and other codes and regulations.

Warranty claims will also not be accepted for damage occurring during operation due to operating conditions deviating from those specified in the data sheet or in other agreements.

Justified complaints will be remedied by reworking by us or specialist companies authorized by us.

Claims going beyond the scope of the warranty will not be accepted. The customer shall have no right to the supply of a replacement valve.

Maintenance work, installation of parts from other manufacturers, any modifications to the design and natural wear are not covered by the warranty.
Transport damage must be reported not to us but ***without delay*** to your responsible goods handling company, the railway company or the shipping agent as otherwise all claims for damages against these companies will be voided.

10.0 Explanation on Codes and Directives

The Commission of the European Union has laid down common directives for the free trading of goods within the Union specifying minimum requirements for safety and health protection. The CE symbol confirms that products comply with the EU directives resp. Regulations, i.e. in conformity with the relevant, in particular harmonised standards. Regulation EU/2016/426 and Directive 2014/68/EU are of relevance for the gas pneumatic valve (mechanical part).

Notes on Regulation EU/2016/426 (Gas Appliances Regulation, GAR):
The valves have been developed, manufactured and tested in accordance with harmonised standard DIN EN 13611 and DIN EN 16678 and comply with the relevant requirements of the above mentioned regulation. Unless otherwise stated separately, this has been confirmed by a type test.

Notes on Directive 2014/68/EU (Pressure Equipment Directive, DGRL):
It has been conformed that the quality assurance in design control, manufacture and final acceptance of the manufacturer, UNI-Geräte E. Mangelmann Elektrotechnische Fabrik GmbH, satisfy the requirements of 2014/68/EU Article 14 Module H. The gas pneumatic valves comply with the fundamental requirements of Directive 2014/68/EU. Valves in according to Article 1 Paragraph 2,f,v or Article 4 paragraph 3 are not allowed to have the CE Mark in according to Article 18.

Note concerning ex-guideline 2014/34/EU (explosion guideline ATEX):
The product is not subject to guideline 2014/34/EU, since due to the loads occurring during practical operation, there is no effective source of ignition even in case of an error case to be assumed. This also applies to spring loaded components in gas filled rooms. In case of electric drives, sensors or other electric components the application as per 2014/34/EU is to be checked separately.

11.0 Drawing

11.1 Fig. 1a Sectional drawing PX… DN50 - DN150:

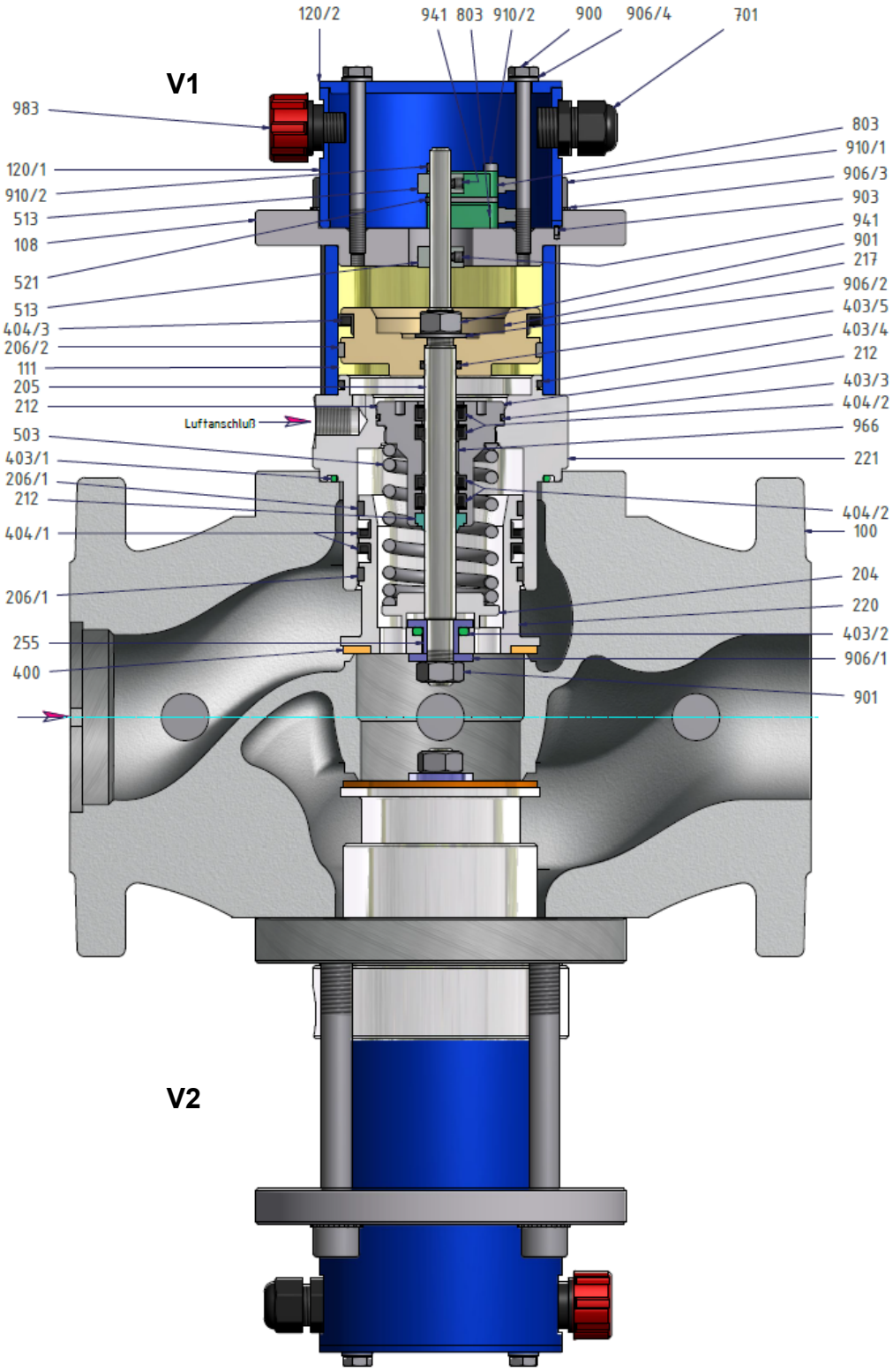

Fig.1b Sectional drawing PX.. DN100 -DN150:

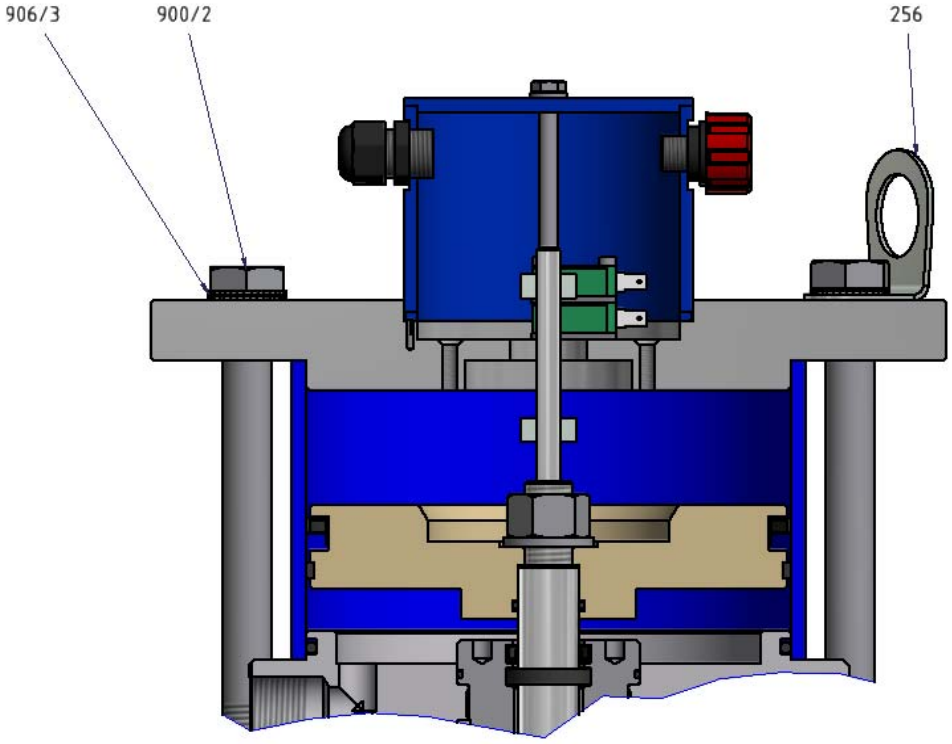

Fig. 2 Wear part, spare part kit for valve (V1) and Valve (V2)

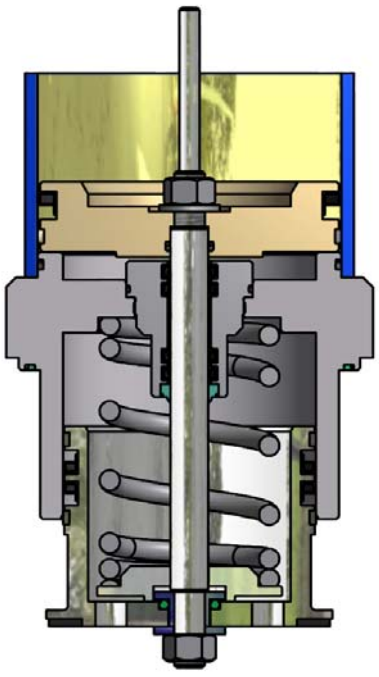

Fig. 3a Control valve (805)

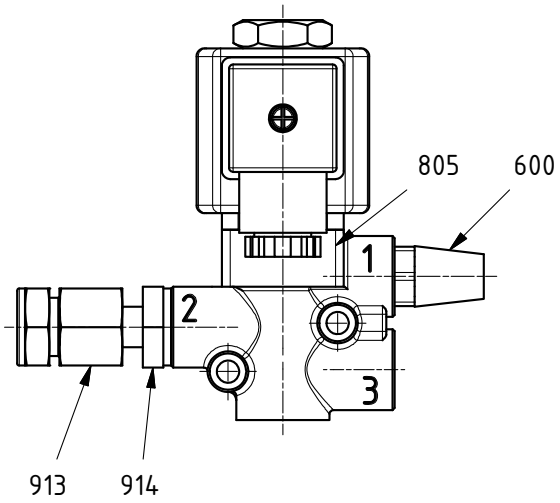

Fig. 3b control valve with qick venting mechanism

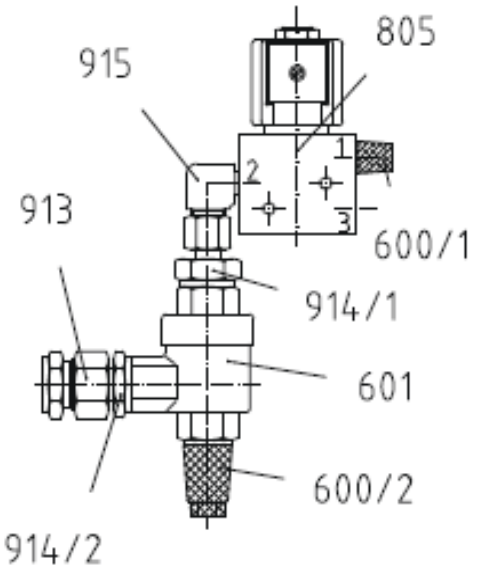

Connection 1 = Ventilation
Connection 2 = Drive
Connection 3 = Control air

11.2 List of parts

Pos./Item	Stück/Qty.	Benennung	Description
100	1	Ventilgehäuse	Valve chamber/housing
108	2	Gehäuseflansch	housing flange
111	2	Pneumatikzylinder	pneumatic cylinder
204	2	Federführung	spring guide pin
205	2	Ventilspindel	valve spindle
212	2	Spindelführung	spindle guide
217	2	Antriebskolben	drive piston
220	2	Ausgleichskolben	balance piston
221	2	Kolbenführung	piston guide
255	2	Führungsteil	guide piece
256	3	Transportwinkel	transport angle
400	2	Ventiltellerdichtung	valve disk sealing
405	2	Abstreifring	scraper ring
503	2	Druckfeder	pressure spring
513	4	Endschalterbetätigung	switch actuator
521	2	Montageplatte	mounting plate
600/1	2	Schalldämpfer	Sound absorber
600/2	2	Schalldämpfer	Sound absorber
601	2	Schnellentlüfter	quick-venting mechanism
701	2	Kabelverschreibung	cable gland
803	4	Endschalter	limit switch
805	2	Steuerventil	Control valve
901	4	Sechskantmutter	hex. nut
903	2	Kerbstift	grooved dowel pin
913	2	Gerade Einschraubverschraubung	Linear threaded screw connector
914	2	Gerader Aufsteckstutzen	Linear put on adapter
914	2	Gerader Aufsteckstutzen	Linear put on adapter
915	2	Winkel Einschraubverschraubung	Angle threaded screw connector
941	4	Gewindestift mit IKS mit Spitze	setscrew with IKS with point
966	2	DU-Buchse	DI-Liner
983	2	Entlüftungsstopfen	exhaust plug
120/1	2	Endschaltergehäuse	limit switch housing
120/2	2	Endschaltergehäuse	limit switch housing
206/1	4	Führungsring	guide ring
206/2	2	Führungsring	guide ring
403/1	2	O-Ring	O-ring
403/2	2	O-Ring	O-ring
403/3	2	O-Ring	O-ring
403/4	2	O-Ring	O-ring
404/1	2(4)	Lippenring	lip-ring

Pos./Item	Stück/Qty.	Benennung	Description
404/2	8	Lippenring	lip-ring
404/3	2	Lippenring	lip-ring
900	4	Sechskantschraube	hexagon head screw
900/2	16(12)	Sechskantschraube	hexagon head screw
906/1	2	Scheibe	washer
906/2	2	Scheibe	washer
906/3	8 (5 /12/13)	Scheibe	washer
906/4	4	Scheibe	washer
910/1	8	Zylinderschraube	cylinder head screw
910/2	4	Zylinderschraube	cylinder head screw

11.3 View drawing

Fig. 4

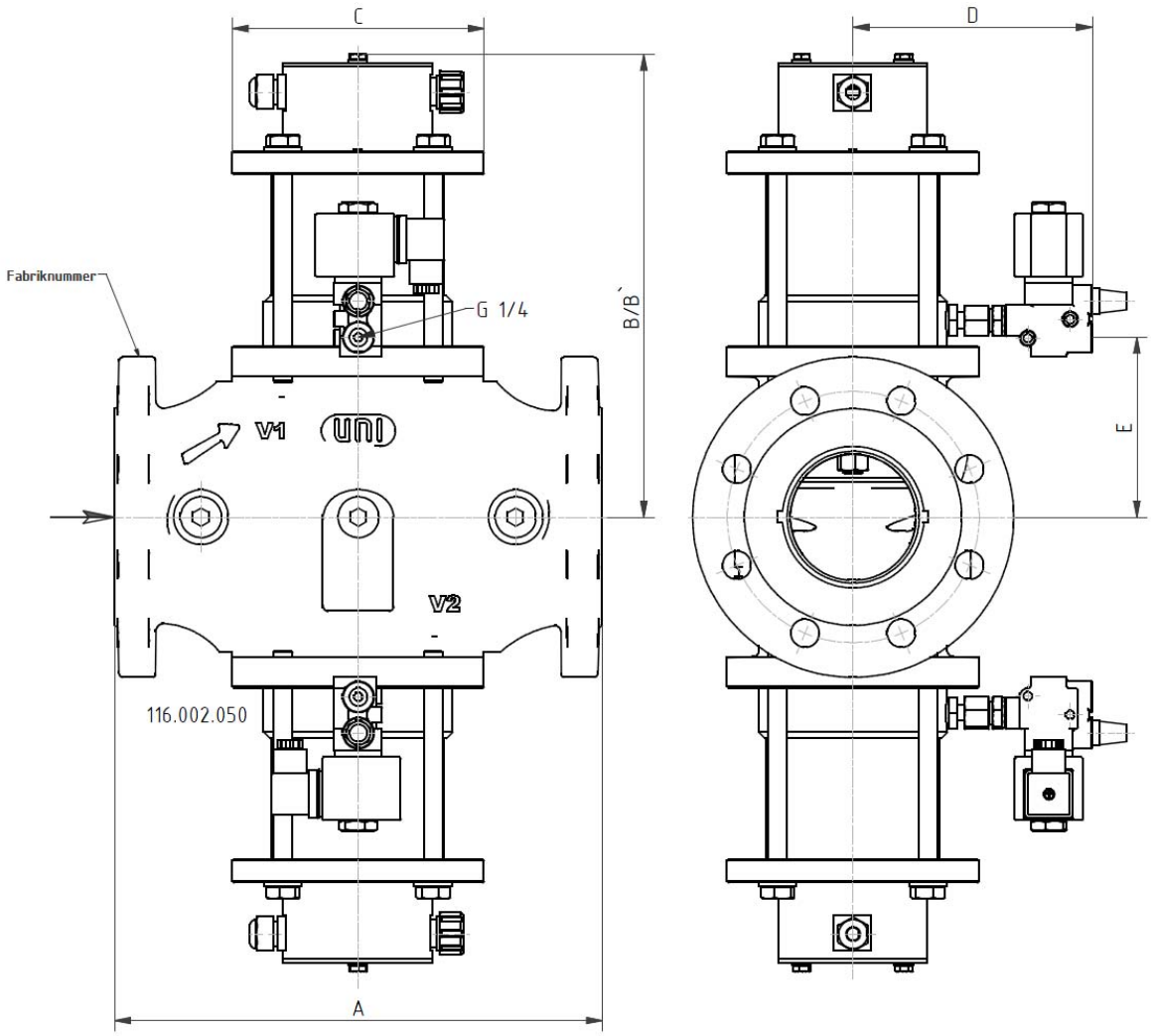

B'=Dimension for disassembling of complete drive

Dimension

Series	DN	A[1)]	ANSI	B	B`	ØC	D	E
PX...	50	290	2“	257	360	145	142	106
	65	290	21/2“	257	360	145	142	114
	80	310	3“	295	410	160	152	131
	100	350	4“	310	460	195	164	302
	150[(X)]	480	6”	407	600	263	250	295

A[(1)] = Dimension at DIN (resp. flanges ANSI and dimension DIN or flanges and dimension at DIN)

Spare part

Type	Fig.	Spare part
PX...	Fig.2	Spare part kit for wear part V1 and V2

12.0 Declaration of Conformity

UNI-Geräte E. Mangelmann
Elektrotechnische Fabrik GmbH
Holtumsweg 13
D – 47652 Weeze

EU

Konformitätserklärung
Declaration of Conformity

Produkt / Product	**Automatisches Doppel Absperrventil - schließend bei Ausfall der Hilfsenergie** / Automatic double shut off valve - closing in case of failure of auxiliary power
Handelsbezeichnung / *Trade Mark*	**Pneumatikventil** / *Pneumatic valve*
Baureihe / *Series*	**PX...**
Nennweiten / *Size*	**DN 40**[b] **/ 50**[a];b **/ 65**[a];b **/ 80**[a];b **/ 100**[a];b **/ 125**[b] **/ 150**[a];b
Druckstufe / *Presssure Stage*	**PN 10**[a];b **/ 16**[a];b **/ 25**[b] **/ 40**[b]
Fluidgruppe / *Fluid Group*	**Brennbare Gase, FL. Gr.1** / *Flammable gases, FL. Gr.1*
EU - Richtlinien / *EU - Directives*	**EU/2016/426**[a] **Gasgeräteverordnung** / ***G**as **A**ppliance **R**egulation* **2014/68/EU**[b] **Druckgeräterichtlinie** / ***P**ressure **E**quipment **D**irective*
Konformitätsbewertungsverfahren / *Conformity Assessment Procedure*	**Modul B + D - EU/2016/426**[a]**; Modul B + H - 2014/68/EU**[b]
Angewandte technische Spezifikation / *Applied Technical Specification*	**DIN EN 16678:2016-02; DIN EN 13611:2016-09; AD 2000**[b]
EG-Baumusterprüfung / *EC-Type Examination*	**CE-0085CR0022**[a] **EU/2016/426 Modul B** **DVGW CERT GmbH** **Josef-Winter-Str. 1-3** **D-53123 Bonn** **Zertifizierungsstelle** / *Notified Body* **0085**
	01 202 973-B-16-0024[b] **2014/68/EU Modul B** **TÜV Rheinland Industrie Service GmbH** **Am Grauen Stein** **D-51105 Köln** **Zertifizierungsstelle** / *Notified Body* **0035**
Überwachungsverfahren / *Surveillance Procedure*	SE-**0085BL7038**[a] **EU/2016/426 Modul D** **DVGW CERT GmbH** **Josef-Winter-Str. 1-3** **D-53123 Bonn** **Zertifizierungsstelle** / *Notified Body* **0085**
	CE-0062-PED-H-UGM 001-20-DEU[b] **2014/68/EU Modul H** **Bureau Veritas Services SAS** **8 Cours du Triangle** **92800 PUTEAUX – LA DEFENSE** **Zertifizierungsstelle** / *Notified Body* **0062**
Kennzeichnung / *Marking*	**CE - 0085**[a] **0062**[b] **oder**/*or* **CE - 0062**[b]

Das Unternehmen UNI Geräte E. Mangelmann Elektrotechnische Fabrik GmbH erklärt in alleiniger Verantwortung, dass die o.a. Baureihe die grundsätzlichen Anforderungen der aufgeführten Richtlinien und Normen erfüllt.
UNI Geräte E. Mangelmann Elektrotechnische Fabrik GmbH confirms under the sole responsibility of the manufacturer, that the basic requirements of the above specified directives and standards are fulfilled.

Weeze, 14.05.2020

Ort und Datum / *place and date*

Geschäftsführer / *Managing Director*
Norbert Schneider

[a];[b] **Anwendung in Abhängigkeit von Nennweite und / oder Druckstufe:** / Application depending on size and / or preassure stage:
DN < 25 und / oder PS < 0,5bar siehe Diagramm 6, oder Kat.1 + erfasst von EU/2016/426, fallen nicht in den Anwendungsbereich der 2014/68/EU
DN < 25 and / or PS < 0,5bar see diagram 6, or Kat.1 + under the scope of EU/2016/426, are not covered by the scope of the EC-Directive 2014/68/EU

250.100.000-03