Operating and mounting manual (Double-) Safety shut off valve gas – solenoid valve VS… / DVS…

Contents

1.0 General Remarks
- 1.1 General Remarks / manufacturer´s data
- 1.2 Valve data
- 1.3 Voltage
- 1.4 Application

2.0 Danger Notices
- 2.1 Safety terms
- 2.2 Safety notice
- 2.3 Qualified staff
- 2.4 Unauthorized modification and spare part production
- 2.5 Unauthorized operation
- 2.6 Safety information regarding guideline 2014/68/EU attachment I

3.0 Handling
- 3.1 Transport
- 3.2 Storage
- 3.3 Handling before mounting

4.0 Product Description
- 4.1 Description / Function
- 4.2 Technical data
- 4.3 Marking

5.0 Installation
- 5.1 Warning of dangers during installation, operation and maintenance
- 5.2 Installation

6.0 Operation
- 6.1 General remarks
- 6.2 Commissioning
- 6.3 Shutting down
- 6.4 Maintenance interval
- 6.5 Repair or maintenance work
- 6.6 Putting back into operating

7.0 Troubleshooting
- 7.1 Detection of defects
- 7.2 Troubleshooting plan

8.0 Dismantling of the valve
- 8.1 General remarks
- 8.2 Replacement of wear parts
- 8.3 Removing the valve unit
- 8.4 Installing the valve unit
- 8.5 Removing the dirt trap
- 8.6 Installing the dirt trap

9.0 Warranty

10.0 Explanations on Codes and Directives
10.1 General remarks
10.2 Regulation EU2016/426 gas appliances regulation
10.3 Directive 2014/68/EU pressure equipment directive, DGRL

11.0 Drawing
11.1 Sectional drawing
11.2 List of parts
11.3 View drawing
11.4 Dimension

12.0 Declaration of Conformity

1.0 General Remarks

1.1 General Remarks / manufacturer´s data

This operating manual includes instructions to assemble and operate the valve in the prescribed and safe way. **Additionally, the adeqaute operating instructions of each special solenoid drive must be considered.**

Series MA... 220.100.159

If any difficulties appear that can not be solved by means of the operating manual, further information may be demanded from the manufacturer.
This operating manual is in accordance with the relevant valid EN safety standards and the valid prescriptions and rules of the Federal Republic of Germany.
If the solenoids are used abroad of the FRG, the operator and/or the person who is responsible for the plant concept must take care that the valid national rules are met.
The manufacturer reserves the right of any technical change and improvement.
The use of these operating instructions suppose the qualification of the user according to paragraph 2.3 “qualified staff”.
The operating staff must be trained in accordance with the operating instructions. The operating manual must always be available at the location where used.

Manufacturer´s data
UNI Geräte E. Mangelmann
Elektrotechnische Fabrik GmbH
Holtumsweg 13
D-47652 Weeze
Telefon: +49 (0) 2837/9134-0
Fax: +49 (0) 2837/1444
E-Mail: info@uni-geraete.de
Homepage: www.uni-geraete.de

1.2 Valve data

Directly acting, closed when currentless, spring-loaded safety shut-off valve of type series VS with solenoid drive. Type series DVS spring-loaded double safety shut-off valve with 2 valve units and 2 solenoid drives.

Type test acc.:	EU2016/426	Product ID No. **CE-0085CS0240**
DIN EN 16678 /2016-02	Kl. A Gr. 2	
Working pressure:	VS… DVS…	0 - 10 bar 0 - 10 bar
Medium temperature:	-20°C to + 60°C	
Ambient temperature:	-20°C to + 60°C	
Fitting position:	Any	
Switching cycles:	see operating instructions solenoid drive MA	

Threaded connection dimension at DIN ISO 228-1

Connection G	Prod. Id. CE-0085	1/2 (05)	3/4 (07)	1 (10)	Nom. pressure: bar	Test pressure (*) PT bar
VS…	CS0240	**X**	**X**	**X**	**0 - 10**	**15**
DVS…		**X**	**X**	**X**	**0 - 10**	**15**

(*) Test pressure to perform leakage test "NO FUNCTION TEST"
X Type test acc. to EU2016/426

Flange connection measures acc. to DIN EN 1092-2 / ANSI

Flange DN	Prod. Id. CE-0085	15 (05N)	20 (07N)	25 (10N)	Nom. pressure bar	Test pressure (*) PT bar
VS…N..	CS0240	**X**	**X**	**X**	**0 - 10**	**15**
DVS…N..		**X**	**X**	**X**	**0 - 10**	**15**

(*) Test pressure to perform leakage test "NO FUNCTION TEST"
X Type test acc. to EU2016/426

Vent:	Optional on both sides G1/4 only DVS	before dirt trap; after valve outlet between valve outlet (1st valve) and valve inlet (2nd valve)

1.3 Voltage

Voltage:	24V DC	(-15% bis +10%)
	110V DC/AC 40-60Hz	(-15% bis +10%)
	230V DC/AC 40-60Hz	(-15% bis +10%)
Protection type:	IP65	
Power:	100/10W	

Details to the electrical data can be found on the type signand the adeqaute operating instructions of the solenoid valves.

1.4 Application

The UNI Geräte Gas – Solenoid valves VS / DVS are used as automatic (Double-) safety shut-off valves for protection, limitation, shut-off and release of gas and air supply at main stops or in front of gas burners and gas engines.

The valves are suitable for gases of the 1st, 2nd and 3rd gas families to G260 and for neutral gases.

If used in other cases, the operator must carefully check if construction/design of valve, accessories and materials are suitable for the new application. The range of application is subject to the responsibility of the plant planner. The service life of the valve is 20 years.

2.0 Danger Notices

2.1 Safety terms

The signal terms DANGER, CAUTION and NOTICE are used in this operating manual in case of notices concerning special dangers or for unusal information requiring a special marking.

DANGER! means that in case of non-observance there is danger to life and/or considerable damage.

CAUTION! means that in case of non-observance there is danger of injury and/or damage.

NOTICE! means that attention is drawn to technical correlations/connections.

Observance of other, not especially marked notices concerning transport, assembly, operation and maintenance and other data (in the operation instructions, product documentation and at the unit itself) is also essential, in order to avoid disturbances that might affect direct or indirect damage to property or injury to persons.

2.2 Safety notice

Non observance of safety instructions can lead to loss of any claim for damages.

Non observance can lead to the following mentioned dangers:

- Failure of important functions of the valve/plant
- Endangering of persons by electrical or mechanical influences.
- Protection against accidental contact for moving parts may not be removed as long as the valve is in operation.
- Leakage of dangerous media (e.g. explosive, toxic, hot) must be removed in the way that there is no danger for persons or environment. Laws and regulations must be observed.

2.3 Qualified staff

These are persons who are familiar with erection, assembly, starting, operation and maintenance of the product and who have special qualifications acc. to their activities and functions, e.g.:

- Instruction and obligation to carry out and meet all regional and in-house orders and requirements.
- Education or instruction according to the safety engineering standards in use and maintenance of adequate safety and working protection equipment.
- Training in first aid.

2.4 Unauthorized modification and spare part production

Modification or changes of the valve are only allowed after agreement of the manufacturer. Original drawings and accessories authorized by the manufacturer are for safety purposes. The use of other parts or unauthorized changes at the valve by third persons may cancel and abolish the manufacturere's liability for resulting consequences.

2.5 Unauthorized operation

Operational reliability of the delivered valve is only guaranteed in case of determined use in accordance to paragraph 1 of the operating manual. **The application limits mentioned on the type sign may on no account be exceeded.**

2.6 Safety information regarding guideline 2014/68/EU attachment I

Danger!
UNI valves are not an accessory with a safety function as defined in the PED 2014/68 / EU Article 2 (4) and Article 4 (1) (d) by category IV
Use or classify!

3.0 Handling

3.1 Transport

For any transport works, the generally recognised technical rules and standards as well as rules for prevention of accidents must be observed.

During transport, storage and decommissioning, protective caps must be attached to the sides of the valve.

The goods to be transported must be carefully treated. During transport, the valve must be protected against strokes, impacts or vibration. The coat of lacquer may not be damaged. Transport temperature is –20°C up to +60°C.

Never transport the valve at screwed cable glands, appliance plugs or add-on units. The valve can be transported at transport angle, flange borings or by means of a belt under the solenoid drive.

Transport the valve in a case or on a pallet with smooth base and put it softly on plain floor. **Never put the valve on attachment parts.**

The goods must be checked on completeness and transport damage. See also section 9.0

3.2 Storage

If the valve is not installed immediately after delivery, it must be stored properly.

- Storage temperature -20°C up to +60°C, dry and clean.
- The lacquer protects against corrosion in neutral dry atmosphere. Do not damage colour.
- In humid rooms, a drying agent or a heating resp. is necessary because of condensation of water.

Requirements according to DIN 7716 (products made of caoutchouc and rubber) must be met.

3.3 Handling before mounting

- In case of valve with protection caps, they must be removed before being mounted!
- Protect against atmospheric influences such as humidity.
- Appropriate treatment protects against damage.

4.0 Product Description

4.1 Description / Function

The UNI-Geräte gas solenoid valve VS / DVS is a directly controlled, closed when currentless, fast-closing (double-) shut-off valve according to DIN EN 16678 with solenoid drive and optional in-line dirt trap.

The sectional views in section 11.1, figures 1 through 5 show the valve designs.

Function

By switching on the solenoid drive (800), the solenoid core (207) is drawn towards the upper part of housing (106). The pressure spring (503) is further pre-tensioned and the solenoid core (207) with the valve disc sealing (400) uncovers the valve cross-section. The valve is open.

The valve closes by turn-off, failure or interruption in the power to the solenoid drive. Due to the pressure spring (503) pre-tension, the solenoid core (207) closes with the valve disc sealing (400). The valve is closed at 15% of the nominal voltage.

4.2 Technical data

Opening times: < 1s
Closing times: < 1s

Solenoid- drive type MA….

G / DN	1/2	3/4	1	15	20	25
VS…	MA20P3			MA20P3		
DVS…						

Max. valve loading by pipe power
The indicated moments may not work longer than 10s.

DN		15	20	25
Torsion	Nm	50	86	125
Bending	Nm	105	225	340

Starting torque, pipe screws greased

DN		15	20	25
Torque	Nm	30	30	30

Part tightening torque

Part	Item no.	Thread	Torque Nm
upper part of housing	106	M34 x 1	50
Dirt trap housing	121	M40 x 1	20-50
Screwed plug	904	G1/4	40

Optional dirt trap:

- Filter unit: 5µm
- Separation rate: 99.8%

4.3 Marking

The type sign on the solenoid drive has the following information:

- Fabricator
- Valve type, nominal width, pressure and temperature indication, fitting position
- Year of construction/ production no.
- Product ID No. to EU2016/426
- Valve class and valve group acc. to DIN EN 16678 / 2016-02
- CE-sign and no. of relevant location
- Fluid group and test pressure PT
- Solenoid drive type
- Electr. performance
- Voltage
- Frequency
- Protection type

Refer also to section 10.0.

5.0 Installation

5.1 Warning of dangers during installation, operation and maintenance

DANGER!
Safe operation of the valve can only be guaranteed if it is installed, commissioned and maintained by qualified personnel (see point 2.3 “Qualified staff“) correctly and in observance of the warnings in this operating manual. Apart from that, the operation safety order and the qualified use of tools and protection equipment must be guaranteed. The operating instructions for the valve must be observed during all work on or with the valve. Failure to observe these instructions may result in injury or in damage to the valve or other installations.

When the valve is used as a final sealing element, a safety precaution e.g. blanking disc, blind flange, etc., in accordance with the code of practice of the German Technical and Scientific Association for Gas and Water (DVGW) is recommended during all repair work.

5.2 Installation

Apart from the general installation guidelines, the following points should be observed:

NOTICE!

- Remove protective caps.
- The inside of the valve and the pipeline must be free from foreign particles.
- Observe the installation position in relation to the flow direction, see markings on the valve.
- Centre gaskets between the flanges.
- The connecting flanges must be aligned.
- Ensure that none of the components is strained during installation.
- The valve must not be used as a fixed point; it is supported by the pipework system.
- Protect valves from soiling, particularly during construction work.
- Thermal expansion of the pipework must be equalized using compensators.

In accordance with DIN EN 16678, a dirt trap must be installed upline of any safety shut-off device. The mesh size of the screen must be smaller than 1.5 mm and not allow a test mandrel of 1 mm diameter to pass. The dirt trap must be installed not too far upline of the first valve.
The series SFR dirt traps from UNI-Geräte are approved for use with gas solenoid valves and pneumatic valves.
For use in plants according to DIN EN 746-2 or DIN EN 16898, corresponding gas filters must be provided in the pipeline.

6.0 Operation

6.1 General Remarks

DANGER!
Before commissioning a new installation or before starting up an installation again after repairs or modifications, ensure:

- The proper completion of all installation and assembly work!
- Commissioning only by "qualified staff" (see point 2.3).
- Installation or repair of existing guards and protection equipment.

6.2 Commissioning

- Before commissioning, check the data on material, pressure, temperature and flow direction with the layout plan of the pipework system.
- Depending on the field of application, the local regulations have to be observed, e.g. the operation safety order.
- Residues in the pipework and the valve (dirt, weld beads, etc.) will inevitably result in leaks.
- Leakage inspection of the installed valve.

6.2 Shutting down

- Depending on the field of application, the local regulations have to be observed, e.g. the operation safety order.

6.4 Maintenance interval

Gas - solenoid valves have to be checked at regular intervals for proper function and internal leak tightness. The intervals for regular inspections have to be defined by the operator according to the operating conditions.
UNI-Geräte recommends an internal visual inspection (*) once a year and an overhaul of the valve after 2 years or after the following number of switching cycles at the latest:

Application temperature	DN ≤ 25	≤ DN 80	≤ DN 150	> DN 150
≤ 25°C	150 000	75 000	25 000	20 000
> 25°C	50 000	25 000	25 000	5 000

(*) For visual inspection, the corresponding spare parts kit "E-Kit Visual inspection" is required. For details see also section 8.0 Dismantling of the valve.

The dirt trap (option) must be replaced at a differential pressure of > 100mbar which occurs as a result of the soiling.

6.5 Repair or maintenance works at the manufacturing company (UNI- Geräte)

DANGER!
Valves and fittings must be delivered clean and free from substances which are harmful to health or to the environment.

6.6 Putting back into operation

When putting a valve back into operation, ensure that all the necessary steps described in section 5.2 (Installation) and section 6.1 (Commissioning) are repeated.

7.0 Troubleshooting

7.1 Detection of defects

DANGER!
Be sure to observe the safety instructions during troubleshooting.

If the malfunctions cannot be remedied using the following ***"Troubleshooting plan (7.2)"*** please contact the manufacturer.

In the event of faults in the function or operating behaviour of the valve, check whether the installation work was carried out and completed as described in this operating manual.

Depending on the field of application, the operation safety order must be observed.

Check the data on material, pressure, temperature, voltage and flow direction with the layout plan of the pipework system. In addition, check whether the operating conditions correspond to the technical data in the data sheet or on the rating plate.

7.2 Troubleshooting plan

Malfunction	Possible causes	Remedy
No flow	Valve does not open	Switch on solenoid drive (800)
		Check operating voltage
	Working pressure too high	Compare working pressure with the data on the rating plate
	Protective caps were not removed	Remove protective caps
Low flow rate	Contaminated strainer	Filter clean / exchange
	Clogging in the pipework system	Check pipework system
Valve leaking at seat, no internal tightness	Valve disc sealing (400) or valve seat (100) damaged by external particles	Perform visual inspection in accordance with section 8.2
No external tightness	O-Ring (403/1, 403) damaged	Perform visual inspection in accordance with section 8.2
	Flange gasket not centered	pay attention to the centered seat of the flange gaskets
	Screws not tightened uniformly	Tighten the screws evenly
Valve does not close	Connected voltage too high	Check whether there is residual voltage, see section 4.1
	external particles in the valve	Check pipework system clean valve
Flange fracture (valve/ pipework)	Screws not tightened uniformly, mating flanges not aligned	Align pipework. Install new valve

NOTICE!
Observe section 9.0 before all installation and repair work!

Observe section 6.6 when putting the valve back into operation!

8.0 Dismantling of the valve

8.1 General Remarks

The need for maintenance work arises from a severe device malfunction, which is able to be classified under section **7.0 Troubleshooting,** or else from the predefined intervals laid down by UNI-Geräte in section **6.4 Maintenance interval**.
For valves with a dirt trap (1110), it should be noted that the dirt trap is designed for a maximum differential pressure of 100mbar. Should the differential pressure exceed this value due to increasing dirt accumulation or if the flow become too low at reduced inlet pressures, the dirt trap must be replaced with the original spare parts kit “E-Kit Dirt trap“ (which besides the dirt trap contains the associated seals).
The carrying out of the relevant maintenance work is described below. Where this results in the need to replace parts, only original replacement parts in the form of Uni-Geräte E-Kits are permissible. Otherwise, the approval and entitlement to warranty expire since UNI-Geräte can no longer accept liability. Furthermore, the external seal tightness – even if initially still existent with the old seals – is no longer guaranteed up until the next scheduled maintenance or overhaul.
The following points should be observed in addition to the generally applicable installation guidelines and industrial health and safety ordinance:

DANGER!
- Depressurised pipework system
- Cooled medium
- Emptied installation
- Vent pipework systems containing corrosive, inflammable, aggressive or toxic media
- Have dismantling work carried out only by qualified staff (see point 2.3)

NOTICE!
The double shut-off valve DVS consists of two identical valve units. For dismantling, these must be marked during disassembly and reassembled on the same side.

8.2 Replacement of wear parts

Shut down the valve as described in section 6.3

Switch off and dismantle the solenoid drive as described in the operating manual of the solenoid drive.

DANGER!
After continuous operation, the solenoid drive may be hot! Danger of burns!

During the visual inspection, pay attention to the following points:

1. Damage at the valve seat – integral part of the valve housing (100)
2. Damage to the valve disc sealing (400) at the solenoid core (207)
3. Damage to the lip-ring (404)
4. Wear of the guide rings (206)
5. Visual inspection of dirt trap (1110), if fitted

CAUTION!
Install wear parts carefully and properly and do not damage them during assembly.

Replace the entire solenoid valve if there is damage at the valve seat.
Damage or use-related wear to the sealing elements/guide rings should be rectified with a UNI-Geräte original spare parts kit “E-Kit Sealing elements“.
In the event of damage to the (optional) dirt trap, it should be replaced with a UNI-Geräte original spare parts kit “E-Kit Dirt trap”.
Following every visual inspection carried out, it is essential to put the spare parts kit “E-Kit Visual inspection” to use during installation as per section **6.4 Maintenance intervals** – to maintain the approval and external seal tightness.

8.3 Removing the valve unit

Undo and remove the upper part of housing (106) with a hook wrench. Take out the solenoid core (207) including the spring bolts (210) and pressure spring (503) and lay them down on a clean surface.

8.4 Installing the valve unit

DANGER!
For special application such as for oxygen use only the approved lubricants and appropriate sealing materials (BAM- approval).

Assemble the valve in the reverse order.

NOTE!
Before installation, all seals should be replaced with new ones from the corresponding spare parts kit. When doing so, be careful to ensure correct assignment and positioning by
one-to-one replacement.
Before fitting the upper part of housing (106), the corresponding threads should be smeared with Loctite 577 (as per the Loctite data sheet) to prevent them working loose during operation.
When fitting the upper part of housing (106) care should be taken that the valve disc sealing (400) is positioned centered on the valve seat.

8.4 Removing the dirt trap

Undo the dirt trap housing (121) with an open-ended wrench (SW41) and remove completely together with the o-ring (403/3+). Take out the dirt trap (1110) together with both o-rings (403/4+ and 403/5+). Clean the empty dirt trap housing (121) of any dirt present by blowing out with compressed air, for example.

8.5 Installing the dirt trap

The dirt trap is installed in the reverse order to the above.

NOTE!
Before installation, all seals should be replaced with new ones from the corresponding spare parts kit. When doing so, be careful to ensure correct assignment and positioning by one-to-one replacement.

Examine the valve for internal and external leaks in accordance with DIN EN 16678 and finally carry out a function test

9.0 Warranty

Scope and period of the warranty is specified in the edition of the “General Terms of Business of the UNI-Geräte E. Mangelmann Elektrotechnische Fabrik GmbH” valid at the time of delivery or else in the purchase agreement.

We warranty that the valve is free from faults in line with the state of the art and for the confirmed field of application.

No warranty claims will be accepted for damage resulting from improper use or failure to observe these operating and installation instructions, the statutory accident prevention regulations, the EN, DIN and VDE standards and other codes and regulations.

Warranty claims will also not be accepted for damage occurring during operation due to operating conditions deviating from those specified in the data sheet or in other agreements.

Justified complaints will be remedied by reworking by us or specialist companies authorized by us.

Claims going beyond the scope of the warranty will not be accepted. The customer shall have no right to the supply of a replacement valve.

Maintenance work, installation of parts from other manufacturers, any modifications to the design and natural wear are not covered by the warranty.

Transport damage must be reported not to us but ***without delay*** to your responsible goods handling company, the railway company or the shipping agent as otherwise all claims for damages against these companies will be voided.

10.0 Explanations on Codes and Directives

10.1 General remarks

The Commission of the European Union has laid down common directives for the free trading of goods within the Union specifying minimum requirements for safety and health protection. The CE symbol confirms that products comply with the EU directives, i.e. in conformity with the relevant, in particular harmonised standards. Regulation EU2016/426 and Directive 2014/68/EU are of relevance for the gas solenoid valve (mechanical part).

10.2 Regulation EU2016/426 gas appliance regulation

Notes on Regulation EU2016/426 (Gas Appliances Regulation):

The valves have been developed, manufactured and tested in accordance with harmonised standard DIN EN 16678 and DIN EN 13611 and comply with the relevant requirements of the Union Regulation EU2016/426. Unless otherwise stated separately, this has been confirmed by a type test.

10.3 Directive 2014/68/EU pressure equipment directive, DGRL

Notes on Directive 2014/68/EU (Pressure Equipment Directive, DGRL):

It has been conformed that the quality assurance in design control, manufacture and final acceptance of the manufacturer, UNI-Geräte E. Mangelmann Elektrotechnische Fabrik GmbH, satisfy the requirements of 2014/68/EU Article 14 Module H. The gas solenoid valves comply with the fundamental requirements of Directive 2014/68/EU. Valves in according to Article 1 Paragraph 2,f,v or Article 4 paragraph 3 are not allowed to have the CE Mark in according to Article 18.

11.0 Drawing:

11.1 Sectional drawing

Fig. 1 thread design, VS… with dirt trap (116.002.292)

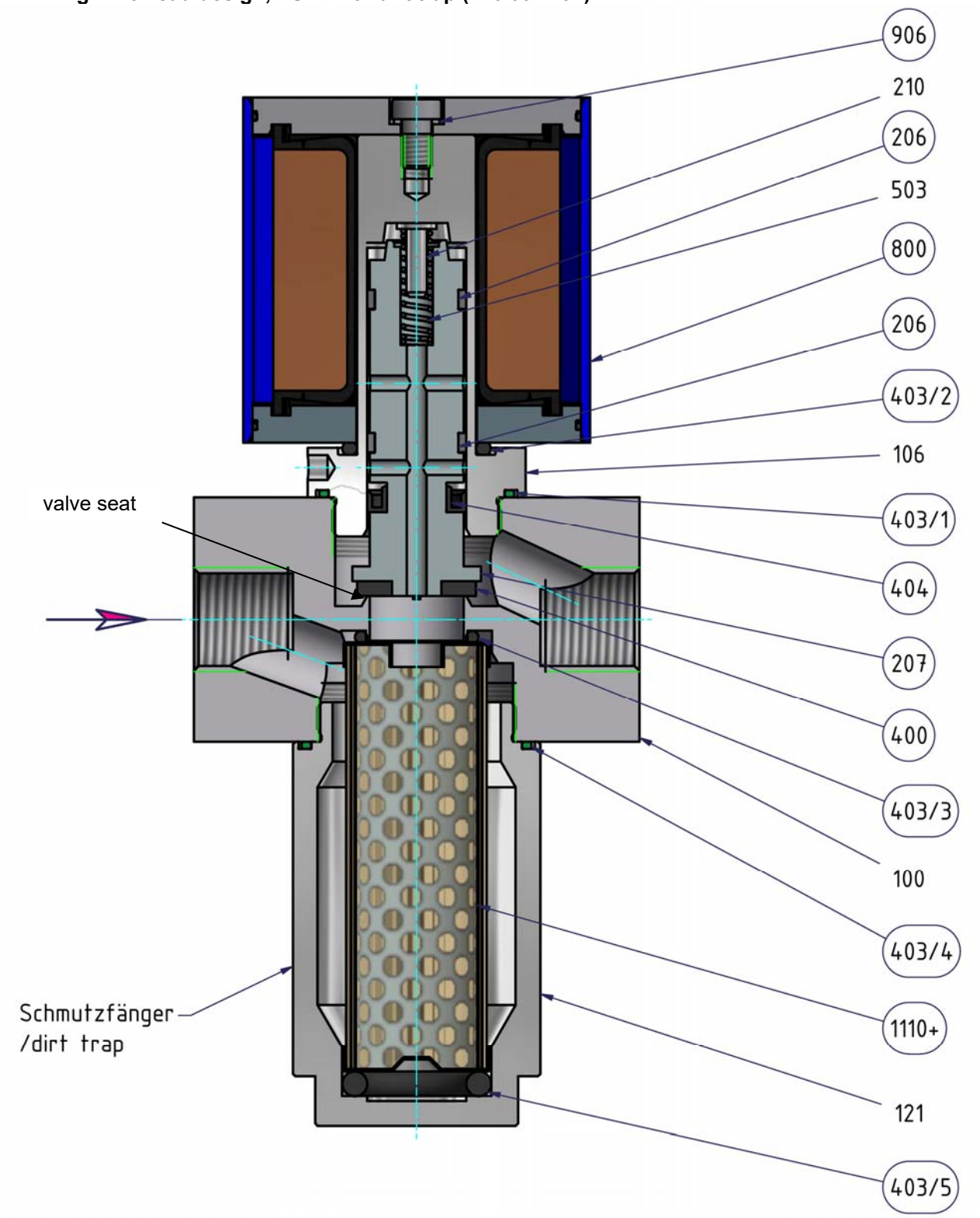

= spare parts (see page 16)

Fig. 2 thread design, VS… (116.002.320)

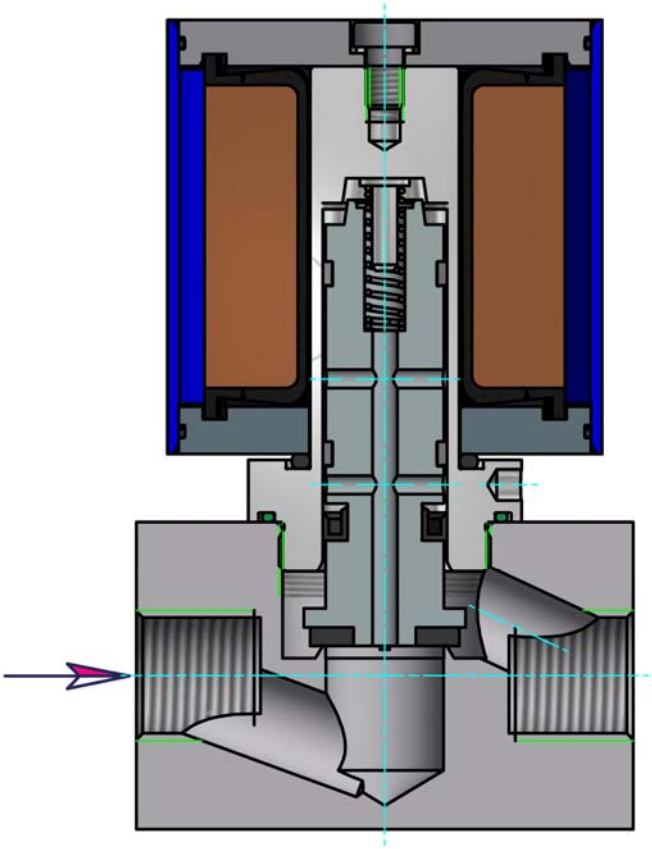

Fig. 3 thread design, DVS… with dirt trap (116.002.295)

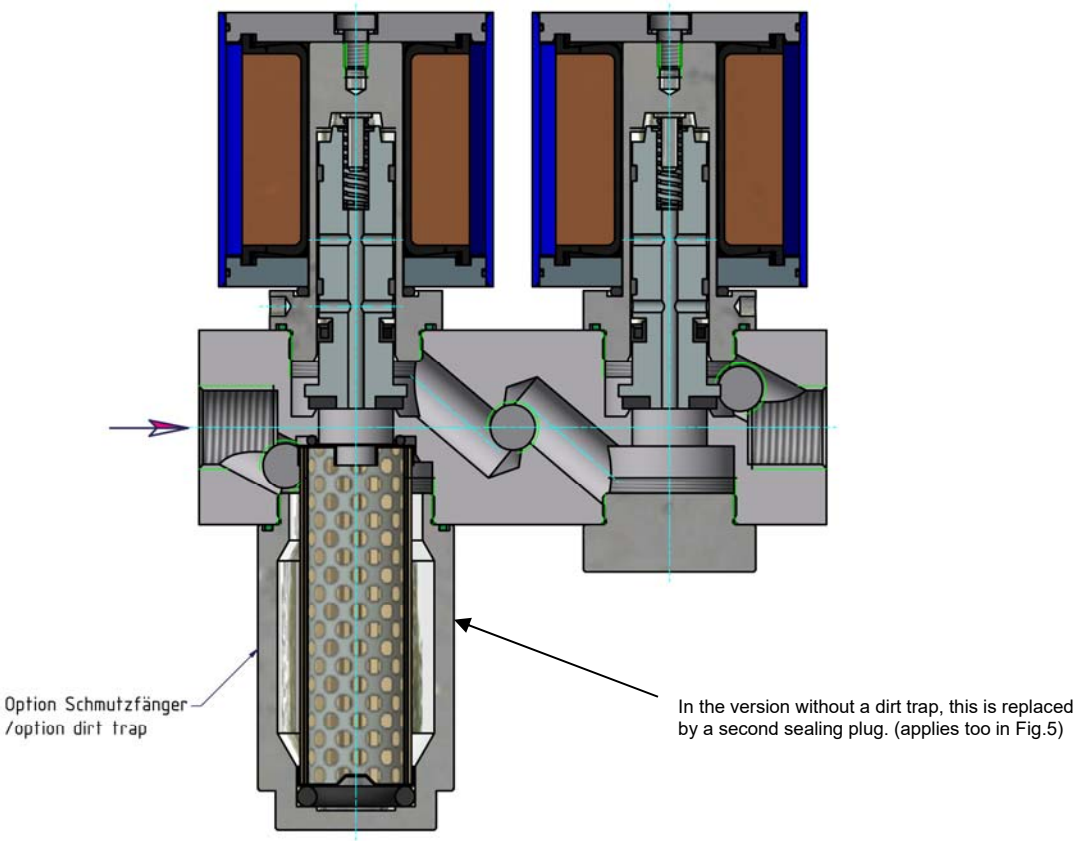

Fig. 4 Flange design, VS…N… with dirt trap (116.002.293)

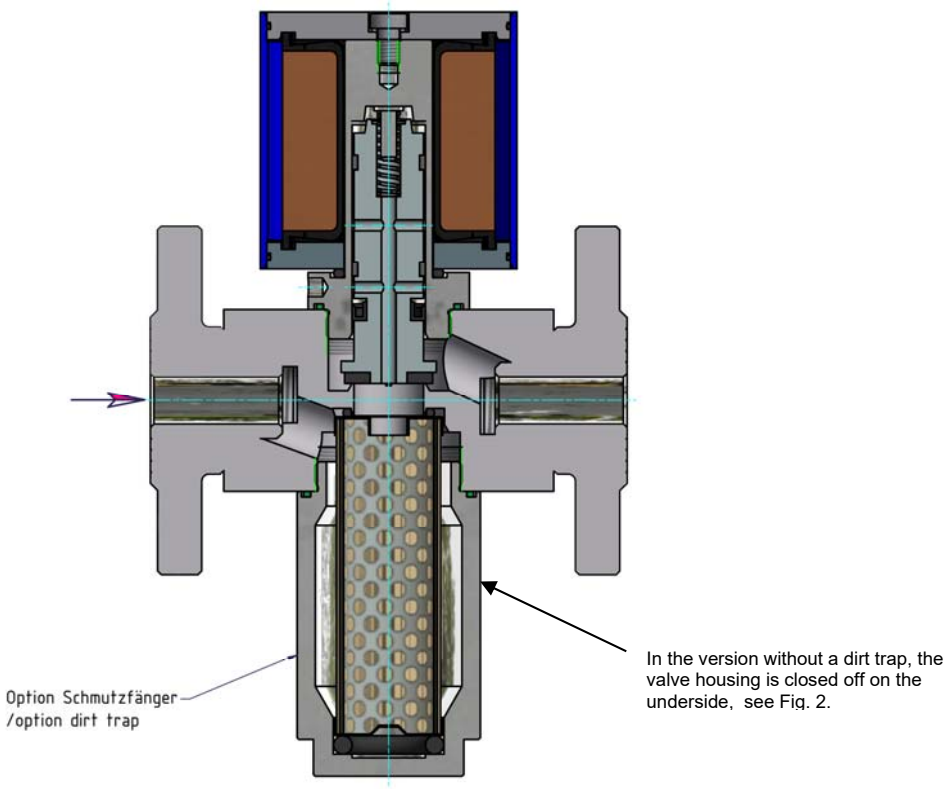

Fig. 5 Flange design, DVS…N… (116.002.296)

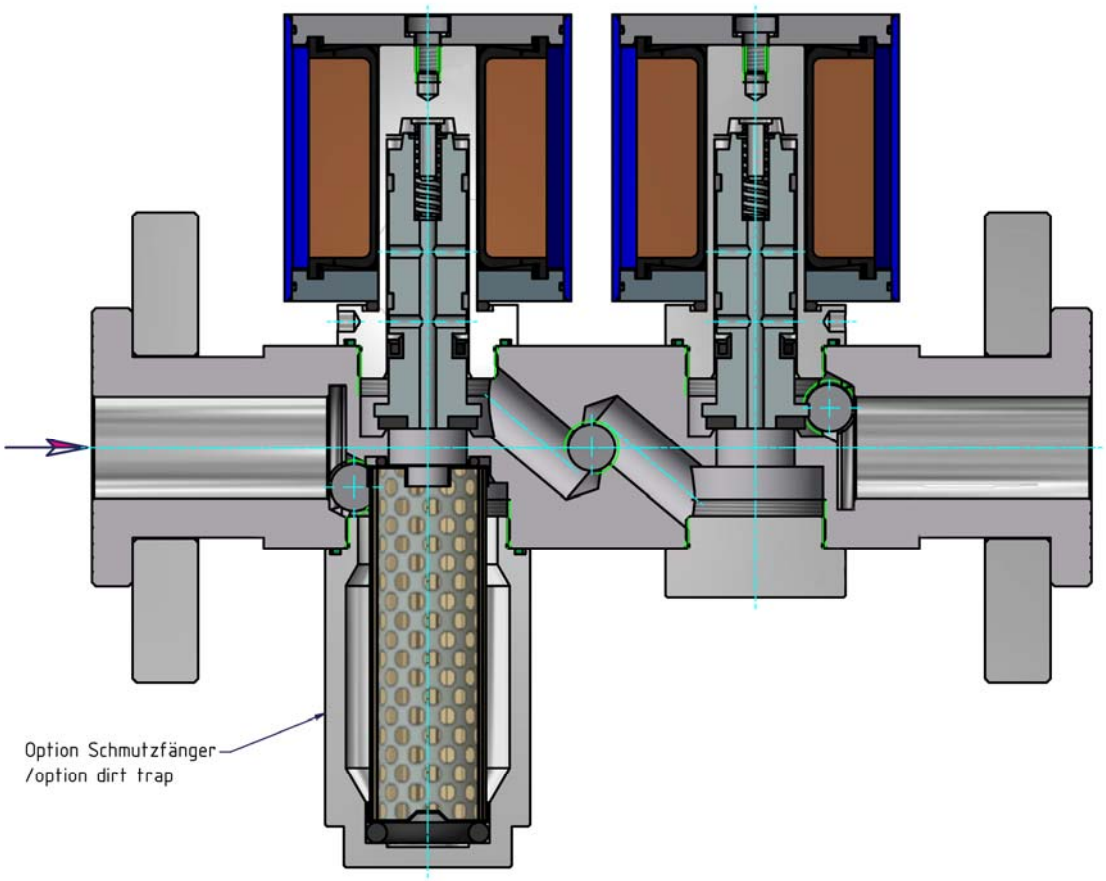

11.2 List of parts

Pos./ Item	Stück/ Qty.	Benennung	Description
100	1	Ventilgehäuse	valve chamber
101	1	Gehäusemutter	housing nut
106	1	Gehäuseoberteil	upper part of housing
121*	1	Schmutzfänger-Gehäuse	dirt trap housing
206	2	Führungsring	guide ring
207	1	Magnetkern	solenoid core
210	1	Federbolzen	spring bolt
400	1	Ventiltellerdichtung	valve disk sealing
403/1	1	O-Ring	o-ring
403/2	1	O-Ring	o-ring
403/3*	1	O-Ring	o-ring
403/4*	1	O-Ring	o-ring
403/5*	1	O-Ring	o-ring
404	1	Lippenring	lip-ring
503	1	Druckfeder	pressure spring
800	1	Magnetantrieb	solenoid drive
904#	6	Verschlussschraube/ Messanschluss	screwed plug/ measurement connection
1110*	1	Schmutzfänger	dirt trap

*= optional dirt trap mounting
= only by DVS design

Spare parts

Version	Type	Spare parts
Single valve	VS…	**E-Kit-Sealing elements+** (1 off 207(1 off 404; 1 off 400; 2 off 206 included)) **E-Kit Dirt trap+** (1 off 403/3; 1 off 403/5; 1 off 1110) **E-Kit Magnetic drive** (See operating instructions for magnetic drive MA) **E-Kit Visual inspection with filter** (1 off 906; 1 off 403/2, 1 off 403/1; 1 off 403/4) **E-Kit Visual inspection without filter** (1 off 906; 1 off 403/2; 1 off 403/1)
Double valve	DVS...	**2x E-Kit Sealing elements+** (1 off 207(1 off 404; 1 off 400; 2 off 206 included)) **1x E-Kit Dirt trap+** (1 off 403/3; 1 off 403/5; 1 off 1110) **2x E-Kit Magnetic drive** (See operating instructions for magnetic drive MA) **2x E-Kit Visual inspection with filter** (1 off 906; 1 off 403/2; 1 off 403/1; 1 off 403/4) **2x E-Kit Visual inspection without filter** (1 off 906; 1 off 403/2; 1 off 403/1)

+ = Always use together with “E-Kit Visual inspection…”

11.3 View drawing

Fig. 1: VS… (118.002.991)

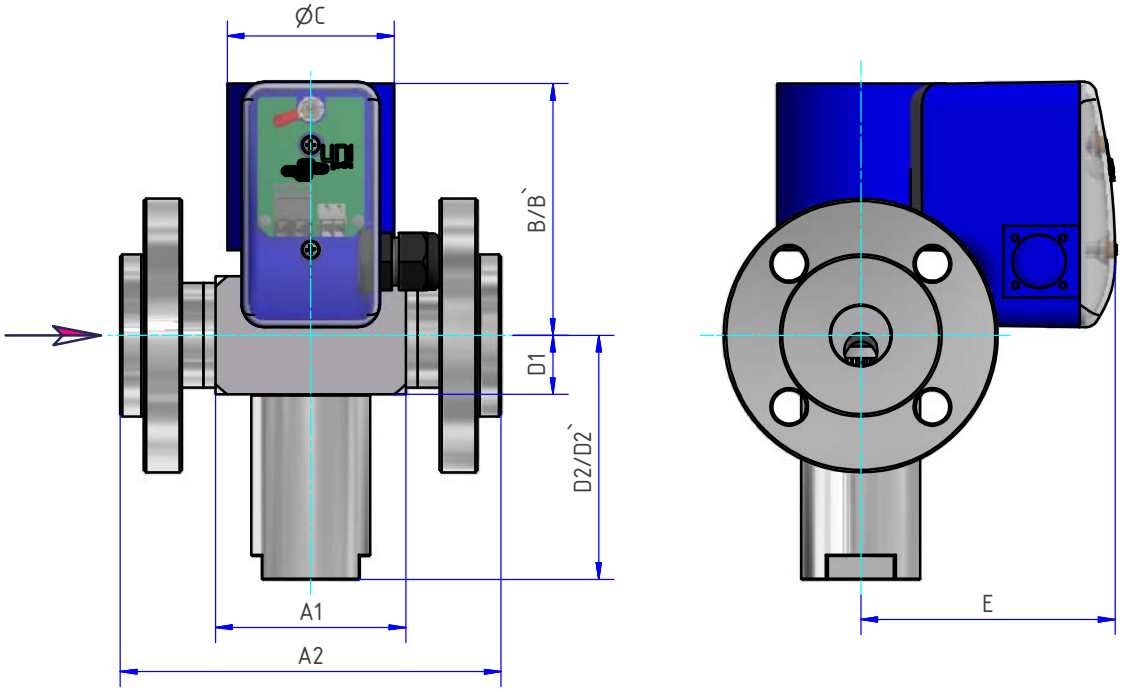

Fig. 2 DVS… (118.002.990)

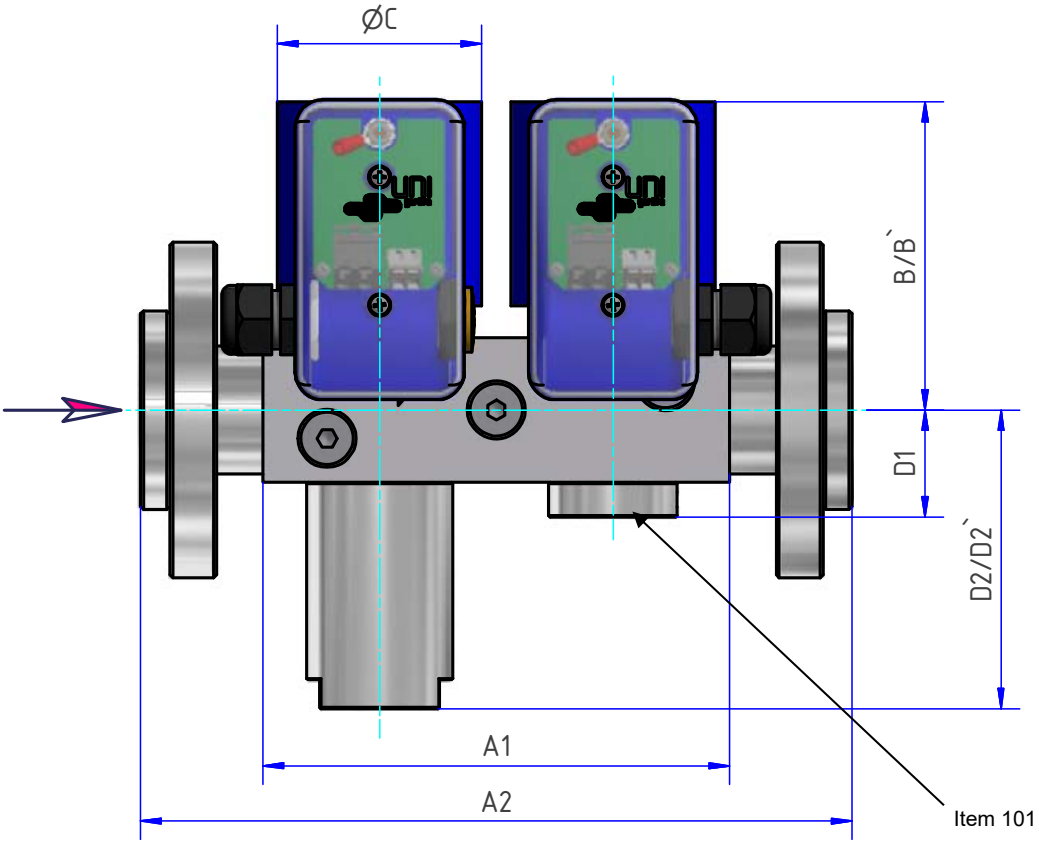

11.4 Dimensions

Thread valves

Type	A1	B	B`	ØC	D1	D2	D2`	E
VS05..	80	106	180	70	25	-	-	107
VS07..	80	106	180	70	25	-	-	107
VS10..	80	106	180	70	25	-	-	107
VS05..S1..	90	106	180	70	-	103	130	107
VS07..S1..	90	106	180	70	-	103	130	107
VS10..S1..	90	106	180	70	-	103	130	107
DVS05..	160	106	180	70	37	-	-	107
DVS07..	160	106	180	70	37	-	-	107
DVS10..	160	106	180	70	37	-	-	107
DVS05..S1..	160	106	180	70	37	103	130	107
DVS07..S1..	160	106	180	70	37	103	130	107
DVS10..S1..	160	106	180	70	37	103	130	107

Flange valves

Type	A2	B	B`	ØC	D1	D2	D2`	E
VS05N..	130	106	180	70	25	-	-	107
VS07N..	150	106	180	70	25	-	-	107
VS10N..	160	106	180	70	25	-	-	107
VS05N..S1..	130	106	180	70	-	103	130	107
VS07N..S1..	150	106	180	70	-	103	130	107
VS10N..S1..	160	106	180	70	-	103	130	107
DVS05N..	200	106	180	70	37	-	-	107
DVS07N..	230	106	180	70	37	-	-	107
DVS10N..	244	106	180	70	37	-	-	107
DVS05N..S1..	200	106	180	70	37	103	130	107
DVS07N..S1..	230	106	180	70	37	103	130	107
DVS10N..S1..	244	106	180	70	37	103	130	107

S1 = Dirt trap in inlet
B`= Size to remove the solenoid drive; D`= Size to remove the dirt trap
D1 = Without dirt trap ; D2 = With dirt trap

12.0 Declaration of Conformity

UNI-Geräte E. Mangelmann
Elektrotechnische Fabrik GmbH
Holtumsweg 13
D – 47652 Weeze

EU

Konformitätserklärung
Declaration of Conformity

Produkt / Product	**Automatisches (Doppel) Absperrventil - schließend bei Ausfall der Hilfsenergie** / Automatic (double) shut off valve - closing in case of failure of auxiliary power		
Handelsbezeichnung / *Trade Mark*	**Magnetventil** / *Solenoid valve*		
Baureihe / *Series*	**(D)VS…**		
Nennweiten / *Size*	**DN 15 / 20 / 25**		
Druckstufe / *Presssure Stage*	**PN 16**		
Fluidgruppe / *Fluid Group*	**Brennbare Gase, FL. Gr.1** / *Flammable gases, FL. Gr.1*		
EU - Richtlinien / *EU - Directives*	**EU/2016/426 Gasgeräteverordnung** / *Gas Appliance Regulation*		
Konformitätsbewertungsverfahren / *Conformity Assessment Procedure*	**Modul B + D - EU/2016/426**		
Angewandte technische Spezifikation / *Applied Technical Specification*	**DIN EN 16678:2016-02; DIN EN 13611:2016-09**		
EG-Baumusterprüfung / *EC-Type Examination*	**CE-0085CS0240** **DVGW CERT GmbH** **Josef-Winter-Str. 1-3** **D-53123 Bonn** **Zertifizierungsstelle** / *Notified Body* **0085**	**EU/2016/426**	**Modul B**
Überwachungsverfahren / *Surveillance Procedure*	SE-**0085BL7038** **DVGW CERT GmbH** **Josef-Winter-Str. 1-3** **D-53123 Bonn** **Zertifizierungsstelle** / *Notified Body* **0085**	**EU/2016/426**	**Modul D**
Kennzeichnung / *Marking*	**CE - 0085**		

Das Unternehmen UNI Geräte E. Mangelmann Elektrotechnische Fabrik GmbH erklärt in alleiniger Verantwortung, dass die o.a. Baureihe die grundsätzlichen Anforderungen der aufgeführten Richtlinien und Normen erfüllt.
UNI Geräte E. Mangelmann Elektrotechnische Fabrik GmbH confirms under the sole responsibility of the manufacturer, that the basic requirements of the above specified directives and standards are fulfilled.

Weeze, 17.01.2019

Ort und Datum / *place and date*

Geschäftsführer / *Managing Director*
Norbert Schneider

250.100.011-02