Uni-Geräte E. Mangelmann
Elektrotechnische Fabrik GmbH
Holtumsweg 13, 47652 Weeze, Germany

Operating manual

Electro-Pneumatic-Valve

Series EPVF…R

Normally opened

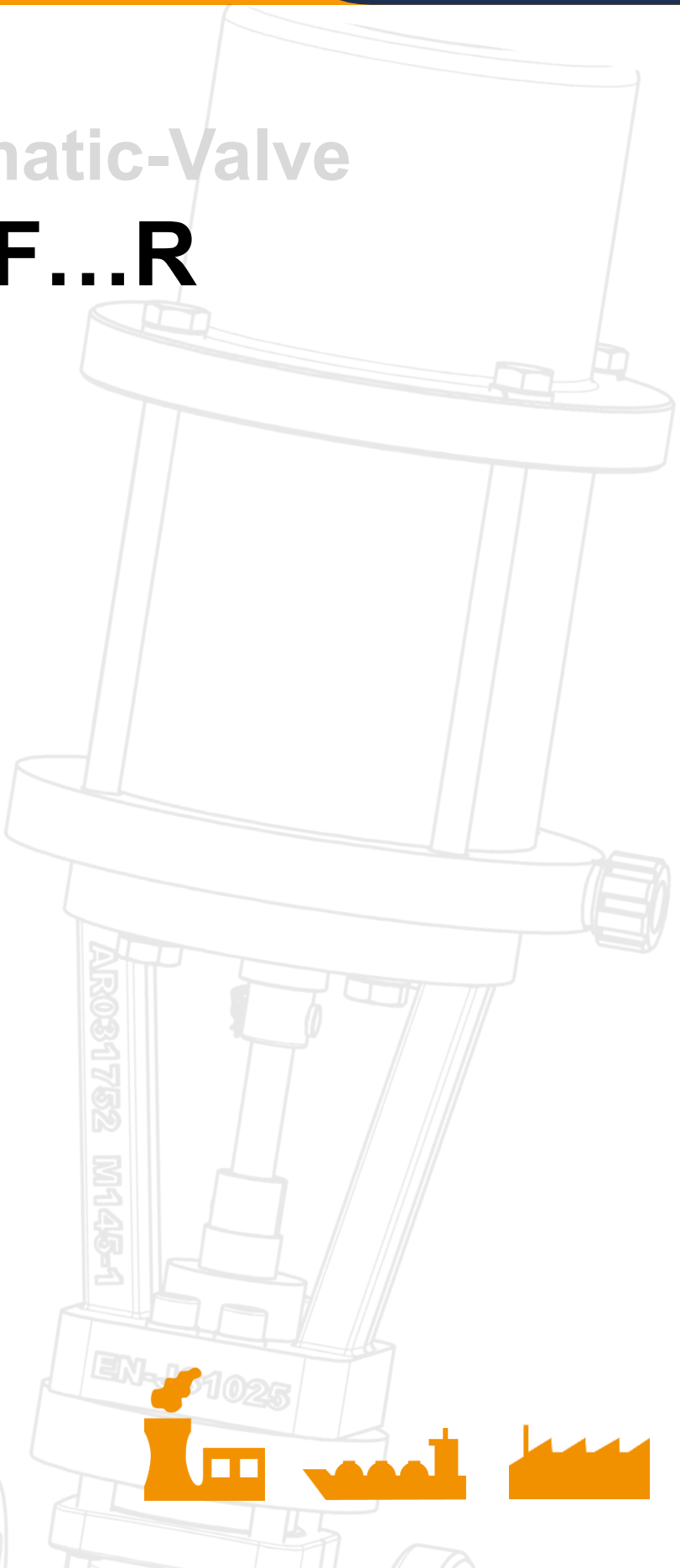

EN

+49 (0) 2837/9134-0 info@uni-geraete.com www.uni-geraete.com

Operating manual

Contents

1.0 General remarks
1.1 Valve data
1.2 Application

2.0 Danger notices
2.1 Safety terms
2.2 Safety notice
2.3 Qualified staff
2.4 Unauthorized modification and spare part production
2.5 Unauthorized operation
2.6 Safety information for the use in explosion-prone areas guideline 2014/34/EU
2.7 Safety information regarding guideline 2014/68/EU attachment I

3.0 Handling
3.1 Transport
3.2 Storage
3.3 Handling before mounting

4.0 Product description
4.1 Function
4.2 Technical data
4.3 Marking

5.0 Installation
5.1 Warning of dangers during Installation, operation and maintenance
5.2 Installation

6.0 Operation
6.1 Commissioning
6.2 Shutting down
6.3 Maintenance
6.4 Putting back into operating

7.0 Troubleshooting
7.1 Detection of defects
7.2 Troubleshooting plan

8.0 Dismantling of the valve
8.1 Replacement of wear parts

9.0 Warranty

10.0 Explanations on codes and directives

11.0 Drawing
11.1 Sectional drawing
11.2 Projection
11.3 Control valve
11.4 List of parts

1.0 General remarks

This operating manual includes instructions to assemble and operate the valve in the prescribed and safe way. **Additionally and accordance with the solenoid drive of the control valve (805), the relevant manufacturer`s operating instructions must be taken into consideration.**
If any difficulties appear that can not be solved by means of the operating manual, further information may be demanded from the manufacturer.
This operating manual is in accordance with the relevant valid EN safety standards and the valid prescriptions and rules of the Federal Republic of Germany. If the solenoids are used abroad of the FRG, the operator and/or the person who is responsible for the plant concept must take care that the valid national rules are met. The manufacturer reserves the right of any technical change and improvement. The use of these operating instructions suppose the qualification of the user according to paragraph 2.3 “qualified staff”.
The operating staff must be trained in accordance with the operating instructions. The operating manual must always be available at the location where used.

1.1 Valve data

Manufacturer:
Uni-Geräte E. Mangelmann Elektrotechnische Fabrik GmbH
Holtumsweg 13, 47652 Weeze, Germany

Designation
Direct-acting, normally opened NO, spring-loaded automatic blow-off valve with pneumatic actuator.

Working pressure:	10-4 - EPVF…R	0 - 10 bar (0 - 1000 kPa)
	15-4 - EPVF…R	0 - 15 bar (0 - 1500 kPa)
	40-4 - EPVF…R	0 - 40 bar (0 - 4000 kPa)
	50-4 - EPVF…R	0 - 50 bar (0 - 5000 kPa)
	55-4 - EPVF…R	0 - 55 bar (0 - 5500 kPa)

Type:	**10 - 4 - EPVF…R**
Fitting position:	vertical or horizontal drive
Medium:	steam
Medium temperature:	-10 °C to + 160 °C (263 K to 433 K)
Ambient temperature:	-10 °C to + 60 °C (263 K to 333 K)

Type:	**15 - 4 - EPVF…R**
Fitting position:	vertical or horizontal drive
Medium:	steam
Medium temperature:	-10 °C to + 300 °C (263 K to 573 K)
Ambient temperature:	-10 °C to + 60 °C (263 K to 333 K)

Operating manual

Type:	**40 - 4 - EPVF…R**
Fitting position:	vertical or horizontal drive
Medium:	water, fuel oil, synthesis gas, methanol, gas
Medium temperature:	-10 °C to + 200 °C (263 K to 473 K)
Ambient temperature:	-10 °C to + 60 °C (263 K to 333 K)

Type:	**40 - 4 - EPVF…R**
Fitting position:	vertical or horizontal drive
Medium:	hot air, water steam
Medium temperature:	-10 °C to + 250 °C (263 K to 523 K)
Ambient temperature:	-10 °C to + 60 °C (263 K to 333 K)

Type:	**40 - 4 - EPVF…R**
Fitting position:	vertical or horizontal drive
Medium:	thermal oil
Medium temperature:	-10 °C to + 300 °C (263 K to 573 K)
Ambient temperature:	-10 °C to + 60 °C (263 K to 333 K)

Type:	**50 - 4 - EPVF…R**
Fitting position:	vertical drive
Medium:	natural gas
Medium temperature:	-10 °C to + 230 °C (263 K to 503 K)
Ambient temperature:	-10 °C to + 60 °C (263 K to 333 K)

Type:	**55 - 4 - EPVF…R**
Fitting position:	vertical drive
Medium:	natural gas
Medium temperature:	-10 °C to + 230 °C (263 K to 503 K)
Ambient temperature:	-10 °C to + 60 °C (263 K to 333 K)

Switching cycles: 500 cycles/h

Threaded connection dimension at DIN ISO 228-1

Connection G	1/4" (2)	3/8 (3)	1/2 (5)	3/4 (7)	1 (10)	1 1/4 (12)	1 1/2 (15)	2 (20)	Test pressure (*) PT
15-4-EPVF…R	-	-	-	O	-	-	-	-	PT 40

(*) Test pressure to perform leakage test "No FUNCTION TEST"
O Acceptance test certificate 3.2 possible, **-** not available

Flange connection measures acc. to DIN EN 1092-2 / ANSI

Flange DN Flange ANSI	PN / ANSI	15 (5N) 1/2"	20 (7N) 3/4"	25 (10N) 1"	32 (12N) 11/4"	40 (15N) 11/2"	50 (20N) 2"	65 (25N) 21/2"	80 (30N) 3"	Test pressure (*) PT
10-4-EPVF…R	16	-	-	-	-	-	O	-	-	PT 16
15-4-EPVF…R	40	-	-	-	-	-	-	-	O	PT 40
40-4-EPVF…R	40	O	O	O	-	-	-	-	-	PT 40
50-4-EPVF…R	600lbs	O	-	-	-	-	-	-	-	PT 100
55-4-EPVF…R	600lbs	O	-	-	-	-	-	-	-	PT 100

(*) Test pressure to perform leakage test "No FUNCTION TEST"
O Acceptance test certificate 3.2 possible, **-** not available

Control medium: Air, nitrogen -20 °C up to + 60 °C
Control pressure: Min. –control pressure, second number on the type plate
Max. –control pressure 10 bar, e.g. 4 - 10 bar
Electric connection control valve: Notice instructions on type plate of control valve.

1.2 Application

The electro-pneumatic-valves EPVF-R are used for the throughput of a medium without control energy and for the discharge of a medium.

If used in other cases, the operator must carefully check if construction/design of valve, accessories and materials are suitable for the new application. The range of application is subject to the responsibility of the plant planner. The service life of the valve is 20 years.

2.0 Danger notices

2.1 Safety terms

The signal terms DANGER, CAUTION und NOTICE are used in this operating manual in case of notices concerning special dangers, or for unusual information, requiring a special marking.

DANGER!
means that in case of non-observance there is danger to life and/or considerable damage.

CAUTION!
means that in case of non-observance there is danger of injury and/or damage.

NOTICE!
means that attention is drawn to technical correlations/connections.

Observance of other, not especially marked notices concerning transport, assembly, operation and maintenance and other data (in the operating manual, product documentation and at the unit itself) is also essential, in order to avoid disturbances that might affect direct or indirect damage to property or injury to persons

2.2 Safety notice

Non observance of safety instructions can lead to loss of any claim for damages.

Non observance can lead to the following mentioned dangers:

- Failure of important functions of the valve/plant.
- Endangering of persons by electrical or mechanical influences.
- Protection against accidental contact for moving parts may not be removed as long as the valve is in operation.
- Leakage of dangerous media (e.g. explosive, toxic, hot) must be removed in the way that there is no danger for persons or environment. Laws and regulations must be observed.

2.3 Qualified staff

These are persons who are familiar with erection, assembly, starting, operation and maintenance of the product and who have special qualifications acc. to their activities and functions, e.g.:

- Instruction and obligation to carry out and meet all regional and in-house orders and requirements.
- Education or instruction according to the safety engineering standards in use and maintenance of adequate safety and working protection equipment.
- Training in first aid.

2.4 Unauthorized modification and spare part production

Modification or changes of the valve are only allowed after agreement of the manufacturer. Original drawings and accessories authorized by the manufacturer are for safety purposes. The use of other parts or unauthorized changes at the valve by third persons may cancel and abolish the manufacturer's liability for resulting consequences.

2.5 Unauthorized operation

Operational reliability of the delivered valve is only guaranteed in case of determined use in accordance to paragraph 1 of the operating manual. **The application limits mentioned on the type sign may on no account be exceeded.**

2.6 Safety information for the use in explosion-prone areas guideline 2014/34/EU

- The temperature of the medium must not exceed the respective temperature class, and respectively, the respective maximum permitted medium temperature as per operation guideline.
- If the valve is heated (e.g. heating jacket), care must be taken, that the specified temperature class is kept in the time.
- The valve must be connected to the ground.
  In the case most simple this can be realized via pipe screws by means of tooth disc.
  Otherwise the connection to the ground must be implemented by other measures e.g. cable links.
- Control valves, electrical and electrical/mechanical drives as well as sensors must undergo a separate conformity check as per ATEX. In doing so the respective safety and explosion protection information in the operation instructions are to taken into special consideration.
- Any modifications whatsoever to the valve are not allowed. The ATEX approval is void with immediate effect if the valve is modified without prior authorization (even including painting).
- Uni-Geräte GmbH must be consulted before any modifications are made.

Furthermore we point out the guideline 1999/92/EG, which include the minimum regulations for the improvement of the health-related situation and the safety of the employees, who might be jeopardized by an explosive atmosphere.

2.7 Safety information regarding guideline 2014/68/EU attachment I

DANGER!
Uni-valves are not an accessory with a safety function as defined in the PED 2014/68/EU Article 2 (4) and Article 4 (1) (d) by category IV Use or classify!

3.0 Handling

3.1 Transport

For any transport works, the generally recognised technical rules and standards as well as rules for prevention of accidents must be observed.

During transport, storage and decommissioning, protective caps must be attached to the sides of the valve.

The goods to be transported must be carefully treated. During transport, the valve must be protected against strokes, impacts or vibration. The coat of lacquer may not be damaged. Transport temperature is -20 °C up to +60 °C.

Never transport the valve at pneumatic drive piping/ tubing or components. Transport the valve at provided transport angles (256) from KA120 or ring nut (926) from KA160.

Transport the valve in a box or on a pallet with soft base and it smoothly on even floor. **Never put valve on the piping/ tubing or its components.**

The goods must be checked on completeness and transport damage. See also section 9.0

3.2 Storage

If the valve is not installed immediately after delivery, it must be stored properly.

- Storage temperature -20 °C up to +60 °C, dry and clean.
- The lacquer protects against corrosion in neutral dry atmosphere. Do not damage colour.
- In humid rooms, a drying agent or a heating resp. is necessary because of condensation of water.

Requirements according to DIN 7716 (products made of caoutchouc and rubber) must be met.

3.3 Handling before mounting

- In case of valve with protection caps, they must be removed before being mounted!
- Protect against atmospheric influences such as humidity.
- Appropriate treatment protects against damage.

4.0 Product description

The electro-pneumatic-valves in the EPVF…R series are direct-acting, normally opened NO, spring-loaded automatic blow off valves with pneumatic actuator.

The drive is actuated by a 3/2 way control valve with solenoid drive, type 10-EVD 2 or 10-EVD 2/2401 resp.

The sectional drawing part 11.1 in Fig. 1 - Fig. 5 shows the valve construction.

4.1 Function

When opening the 3/2 way control valve (805) the control medium flows via the connection 3 → 2 above the drive piston (217). The control medium pushes the drive piston (217) against the pressure springs (503) and closed- via the valve spindle (205)- the valve disk (200) that is pressure impinged. The valve is close.

The valve opened in case of shut-off, failure or interruption of power energy to control valve (805). The compressed control medium in the pneumatic drive is blown-off via the control valve (805).

4.2 Technical data

Closing times: 0,8 – 2s depends upon nominal width
Opening times: < 1s

Drive types (KA) and air consumption in standard litre (NL) per connection at 4 bar control pressure

Connection G	**1/2 (5)**	**3/4 (7)**	**1 (10)**
15-4-EPVF…R	-	KA 120 2,5NL	-

Flange DN **Flange ANSI**	**15 (5N) 1/2"**	**20 (7N) 3/4"**	**25 (10N) 1”**	**32 (12N) 11/4”**	**40 (15N) 11/2”**	**50 (20N) 2”**	**65 (25N) 21/2”**	**80 (30N) 3”**
10-4-EPVF…R	-	-	-	-	-	KA 120 2,5NL	-	-
15-4-EPVF...R	-	-	-	-	-	-	-	250 6,5 NL
40-4-EPVF…R	KA 120 2,5NL	KA 120 2,5NL	KA 120 2,5NL	-	-	-	-	-
50-4-EPVF…R	KA 120 2,5NL	-	-	-	-	-	-	-
55-4-EPVF…R	KA 120 2,0 NL	-	-	-	-	-	-	-

Air consumption for 10 bar, multiply control pressure table values by 2,2

Max. valve loading by pipe power
The indicated moments may not work longer than 10s.

DN		**8**	**10**	**15**	**20**	**25**	**32**	**40**	**50**	**65**	**80**	**100**	**125**	**≥150**
Torsion	**Nm**	20	35	50	85	125	160	200	250[1)]	325[1)]	400[1)]	-	-	-
Bending	**Nm**	35	70	105	225	340	475	610	1100	1600	2400	5000	6000	7600

[1)] Not valid in case of valves with flanges

Starting torque, pipe screws greased

DN		**8**	**10**	**15**	**20**	**25**	**32**	**40**	**50**	**65**	**80**	**100**	**125**	**≥150**
Torque	**Nm**	20	30	30	30	30	50	50	50	50	50	80	160	160

Starting torque, product screws and nuts greased

Screw		**M6**	**M8**	**M10**	**M12**	**M16**	**M20**	**M24**
Torque	**Nm**	5	11	22	39	70	110	150

4.3 Marking

The type sign on the pneumatic drive has the following information:

- Fabricator
- Valve type, nominal width, pressure and temperature indication, fitting position
- Year of construction / production no.
- CE-Sign and no. of relevant location
- Fluid group and test pressure PT
- Pneumatic drive type
- Control medium, pmin and pmax for control medium

Refer also to section 10.0

5.0 Installation

5.1 Warning of dangers during installation, operation and maintenance

DANGER!
Safe operation of the valve can only be guaranteed if it is installed, commissioned and maintained by qualified personnel (see point 2.3 “Qualified staff“) correctly and in observance of the warnings in this operating manual. Apart from that, the operation safety order and the qualified use of tools and protection equipment must be guaranteed. The operating instructions for the valve must be observed during all work on or with the valve. Failure to observe these instructions may result in injury or in damage to the valve or other installations.

When the valve is used as a final sealing element, a safety precaution e.g. blanking disc, blind flange, etc., in accordance with the code of practice of the German Technical and Scientific Association for Gas and Water (DVGW) is recommended during all repair work.

5.2 Installation

Apart from the general installation guidelines, the following points should be observed:

NOTICE!

- Remove protective caps.
- The inside of the valve and the pipeline must be free from foreign particles.
- Observe the installation position in relation to the flow direction, see markings on the valve.
- Centre gaskets between the flanges.
- The connecting flanges must be aligned.
- Ensure that none of the components is strained during installation.
- The valve must not be used as a fixed point; it is supported by the pipework system.
- Protect valves from soiling, particularly during construction work.
- Thermal expansion of the pipework must be equalized using compensators.

For shut-off / blow-off valves: Install dirt trap upstream of the valve.
Observe the direction of flow.
The mesh size of the dirt trap must have the following properties:

- be smaller than 1.5 mm
- a test mandrel of 1 mm diameter to pass and not allow.

If two valves are combined to form a group, one dirt trap installed upstream of the first valve is sufficient. The Uni-Geräte dirt catchers of the SFR series are permitted for the use of flange valve.

The valve can be installed with vertical or horizontal pneumatic drive. The solenoid drive of the control valve should preferably be installed with vertical drive. The control air must be connected at connection 3. We recommend an air filter in front of the control valve. Mesh size 40 µm.

NOTICE!
Please observe the control valve documentation.

6.0 Operation

DANGER!
Before commissioning a new installation or before starting up an installation again after repairs or modifications, ensure:

- The proper completion of all installation and assembly work!
- Commissioning only by „qualified staff“ (see point 2.3).
- Installation or repair of existing guards and protection equipment.

6.1 Commissioning

- Before commissioning, check the data on material, pressure, temperature and flow direction with the layout plan of the pipework system.
- Depending on the field of application, the local regulations have to be observed, e.g. the operation safety order.
- Residues in the pipework and the valve (dirt, weld beads, etc.) will inevitably result in leaks.
- Leakage inspection of the installed valve.

6.2 Shutting down

- Depending on the field of application, the local regulations have to be observed, e.g. the operation safety order.

6.3 Maintenance

Electro-pneumatic-valves have to be checked at regular intervals for proper function and internal leak tightness. The intervals for regular inspections have to be defined by the operator according to the operating conditions. Uni-Geräte recommends an internal visual inspection once a year and an overhaul of the valve after 2 years or after the following number of switching cycles at the latest:

Application temperature	≤ DN 25	≤ DN 80	≤ DN 150	> DN 150
≤ 25 °C	150 000	75 000	25 000	20 000
> 25 °C	50 000	25 000	25 000	5 000

Repair or maintenance works at the manufacturing company (UNI- Geräte)

- Valves and fittings must be delivered clean and free from substances which are harmful to health or to the environment.

Uni-Geräte prescribes the following maintenance intervals for valves with <u>SIL requirements</u>:
The safety requirements with regard to the maintenance intervals to be adhered are described in the **SIL manual** of the type series and must be complied with.

6.4 Putting back into operation

When putting a valve back into operation, ensure that all the necessary steps described in section 5.2 (Installation) and section 6.1 (Commissioning) are repeated.

7.0 Troubleshooting

7.1 Detection of defects

DANGER!
Be sure to observe the safety instructions during troubleshooting.

If the malfunctions cannot be remedied using the following ***"Troubleshooting plan (7.2)"*** please contact the manufacturer.

In the event of faults in the function or operating behaviour of the valve, check whether the installation work was carried out and completed as described in this operating manual.
Depending on the field of application, the operation safety order must be observed.

Check the data on material, pressure, temperature, voltage and flow direction with the layout plan of the pipework system. In addition, check whether the operating conditions correspond to the technical data in the data sheet or on the rating plate.

7.2 Troubleshooting plan

Malfunction	Possible causes	Remedy
No flow	Pneumatic drive does not open	Switch off control valve (805)
		Clean sound absorber (600)
	Protective caps were not removed	Remove protective caps
Low flow rate	Clogging in the pipework system	Check pipework system
Valve leaking at seat, no internal tightness	Valve seat gasket (400) or valve seat (100) damaged by external particles	See section 8 or replace valve
No external tightness	Gaskets damaged	See section 8 or replace valve
Valve closes too slowly	Control pressure too low	Check control pressure
	Reduced conductor cross sections	Replace folded control lines
Valve opens too slowly	Dirt in control line	Clean sound absorber (600)
		Clean vent line
Valve does not close	Control valve does not open	Check, if residual voltage is aligned
	Dirt in control line	If necessary, clean filter in control line
	Reduced conductor cross sections	Replace folded control lines
Flansch-Bruch (Ventil-Rohrleitung)	Schrauben einseitig angezogen Gegenflansche fluchten nicht	Rohrleitung ausrichten, neues Ventil montieren!

NOTICE!
Observe section 9.0 before all installation and repair work!

Observe section 6.4 when putting the valve back into operation!

8.0 Dismantling of the valve

In addition to the general installation guidelines and the operation safety order, the following points must also be observed:

DANGER!

- Depressurised pipework system
- Cooled medium
- Emptied installation
- Vent pipework systems containing corrosive, inflammable, aggressive or toxic media
- Have dismantling work carried out only by qualified staff (see point 2.3)
- For special application such as for oxygen use only the approved lubricants and appropriate sealing materials (BAM- approval)

8.2 Replacement of wear parts

Shut down the valve as described in section 6.2.

Switch off control valve (805) and disassemble the control line from pneumatic drive.

Remove attachments (limit switch mounting).

Flange version

Fig.1 10-4-EPVF 20N.R… / 40-4-EPVF.R… (DN15 - DN25)

Loosen hexagon screw (900/2) with lock washer (905/3) and remove spring cap (112).

DANGER!

Dismantling the spring disc (216).

Spring disc (216) with drive piston (217) is under spring tension. By depressing the spring disc (216) and loosen the hex. nut (901/2) with lock washer (905/4), the pressure spring (503/1) are relaxed.

Remove pressure spring (503/1) with sealing piece (226), drive piston (217), spring disc (216) and pneumatic cylinder (111).
Release safety bolt (902/2) with SL-retainer (949). Remove valve spindle (205/1).
Drive spring dowel sleeve (943/2) out of the expansion bellows (504).
Loosen cylinder screw (910/2) with lock washer (905/2) and remove spacer (110).
Loosen cylinder screw (910/1) with lock washer (905/1) and remove housing flange (108/1).
Take valve disk complete (200) with expansion bellows complete (504) and distort protection (227) out of valve chamber (100).

Fig.2 15-4-EPVF 30N.R.Bn…

Replace the complete valve

Fig.3 50-4-EPVF 5N.R…

Loosen hex. head screw (900/3) with Nordlock washer (948/5) and remove spring cap (112).

DANGER!

Dismantling the spring disc (216).

Spring disc (216) with drive piston (217) is under spring tension. By depressing the spring disc (216) and loosen the hex. nut (901/1) with lock washer (905/1), the pressure spring (503/1) are relaxed.

Remove pressure spring (503/1) with sealing piece (226), drive piston (217), spring disc (216) and pneumatic cylinder (111).
Release safety bolt (902/2) with SL-retainer (949). Remove vale spindle (205/1).
Drive spring dowel sleeve (943/1) out of the expansion bellows (504).
Loosen cylinder screw (910/1) with Nordlock washer (948/2) and remove spacer (110).
Take valve disk complete (200) with expansion bellows complete (504), distance ring (509) and distort protection (227) out of valve chamber (100).
Loosen hexagon screw (900/1) with Nordlock washer (948/1) and remove housing flange (108/1).

Fig.4 55-4-EPVF 5N.R…
Limit switch (803) off power supply
Loosen cylinder screw (910/2) with Nordlock washer (948/2) and remove housing flange (108/1).

DANGER!
Dismantling the spring disc (216).
Spring disc (216) with drive piston (217) is under spring tension. By depressing the spring disc (216) and loosen the hex. nut (901/2) with lock washer (905), the pressure spring (503) are relaxed.

Remove pressure spring (503/1) with sealing piece (226), drive piston (217), spring disc (216) and pneumatic cylinder (111).
Release safety bolt (902/2) with SL-retainer (949). Remove valve spindle (205/1).
loosen setscrew (941) and remove switch actuator (513).
loosen and remove hexagon nut (901/1).
Drive spring dowel sleeve (943) out of the expansion bellows (504).
Loosen and remove cylinder screw (910/1) with Nordlock washer (948/1).
Remove spacer (110) with limit switch console (512) and limit switch (803).
Take valve disk complete (200) with expansion bellows complete (504), distance ring (509) and distort protection (227) out of valve chamber (100).

Thread version

Fig.5 15-4-EPVF 7.R…
Replace the complete valve

In case of damage to the valve seat, replace the whole valve.
If the sealing element becomes damaged the spare parts kit should be used.

All parts marked as spare parts are to be replaced.

Install the valve in reverse order.

The lip rings (404) are to be lubricated with lubricant Staburags N32 or equivalent (DVGW-permission).

Lubricate the pneumatic cylinder (111) within they are of the drive piston (217) with lubricant Staburags NBU 30.

CAUTION!
Install wear parts carefully and properly and do not damage them during assembly.

Examine the valve acc. to DIN EN 12266-1 for internal and external leaks and finally carry out a function test.

9.0 Warranty

Scope and period of the warranty is specified in the edition of the “General Terms of Business of the Uni-Geräte E. Mangelmann Elektrotechnische Fabrik GmbH” valid at the time of delivery or else in the purchase agreement.

We warranty that the valve is free from faults in line with the state of the art and for the confirmed field of application.

No warranty claims will be accepted for damage resulting from improper use or failure to observe these operating and installation instructions, the statutory accident prevention regulations, the EN, DIN and VDE standards and other codes and regulations.

Warranty claims will also not be accepted for damage occurring during operation due to operating conditions deviating from those specified in the data sheet or in other agreements.

Justified complaints will be remedied by reworking by us or specialist companies authorized by us.

Claims going beyond the scope of the warranty will not be accepted. The customer shall have no right to the supply of a replacement valve.

Maintenance work, installation of parts from other manufacturers, any modifications to the design and natural wear are not covered by the warranty.

Transport damage must be reported not to us but ***without delay*** to your responsible goods handling company, the railway company or the shipping agent as otherwise all claims for damages against these companies will be voided.

10.0 Explanation on codes and directives

The Commission of the European Union has laid down common directives resp. regulations for the free trading of goods within the Union specifying minimum requirements for safety and health protection. The CE symbol confirms that products comply with the EU directives resp. regulations, i.e. in conformity with the relevant, in particular harmonised standards. Directive 2014/68/EU applies to the valve (mechanical part).

<u>Notes on Directive 2014/68/EU (Pressure Equipment Directive, DGRL):</u>
It has been conformed that the quality assurance in design control, manufacture and final acceptance of the manufacturer, Uni-Geräte E. Mangelmann Elektrotechnische Fabrik GmbH, satisfy the requirements of 2014/68/EU Article 14 Module H. The valves comply with the fundamental requirements of Directive 2014/68/EU. Valves in according to Article 1 Paragraph 2,f,v or Article 4 paragraph 3 are not allowed to have the CE Mark in according to Article 18.

<u>Note concerning ex-guideline 2014/34/EU (explosion guideline ATEX):</u>
The product is not subject to guideline 2014/34/EU, since due to the loads occurring during practical operation, there is no effective source of ignition even in case of an error case to be assumed. This also applies to spring loaded components in medium filled rooms. In case of electric drives, sensors or other electric components the application as per 2014/34/EU is to be checked separately.

11.0 Drawing

11.1 Fig.1 Flange version 10-4-EPVF 20N.R… / 40-4-EPVF.R… (DN15 - DN25)

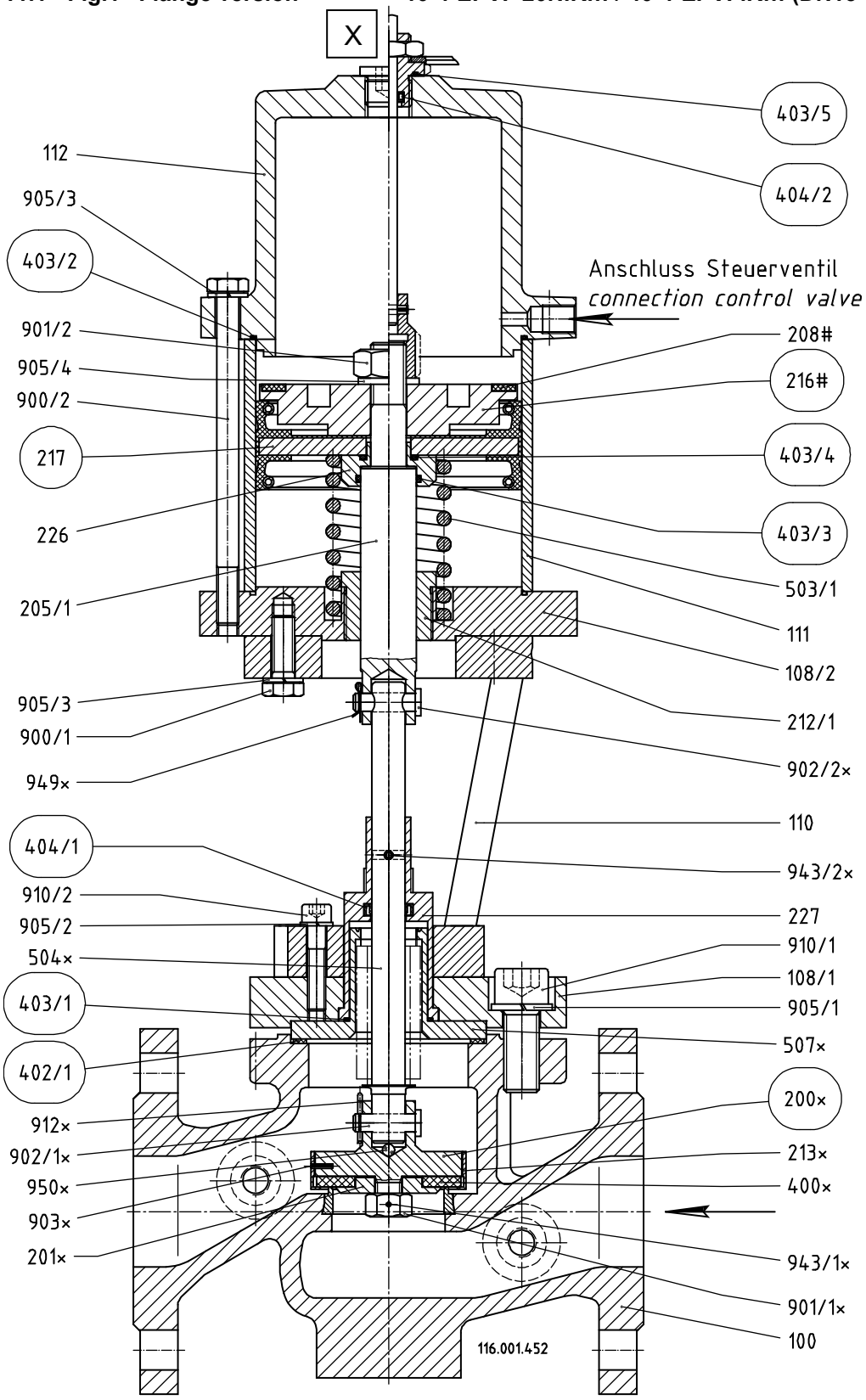

O = Spare part kit
(# or x) supplied as a complete unit

X = Option limit switch mounting

Fig.2 Flange version **15-4-EPVF 30N.R.Bn…**

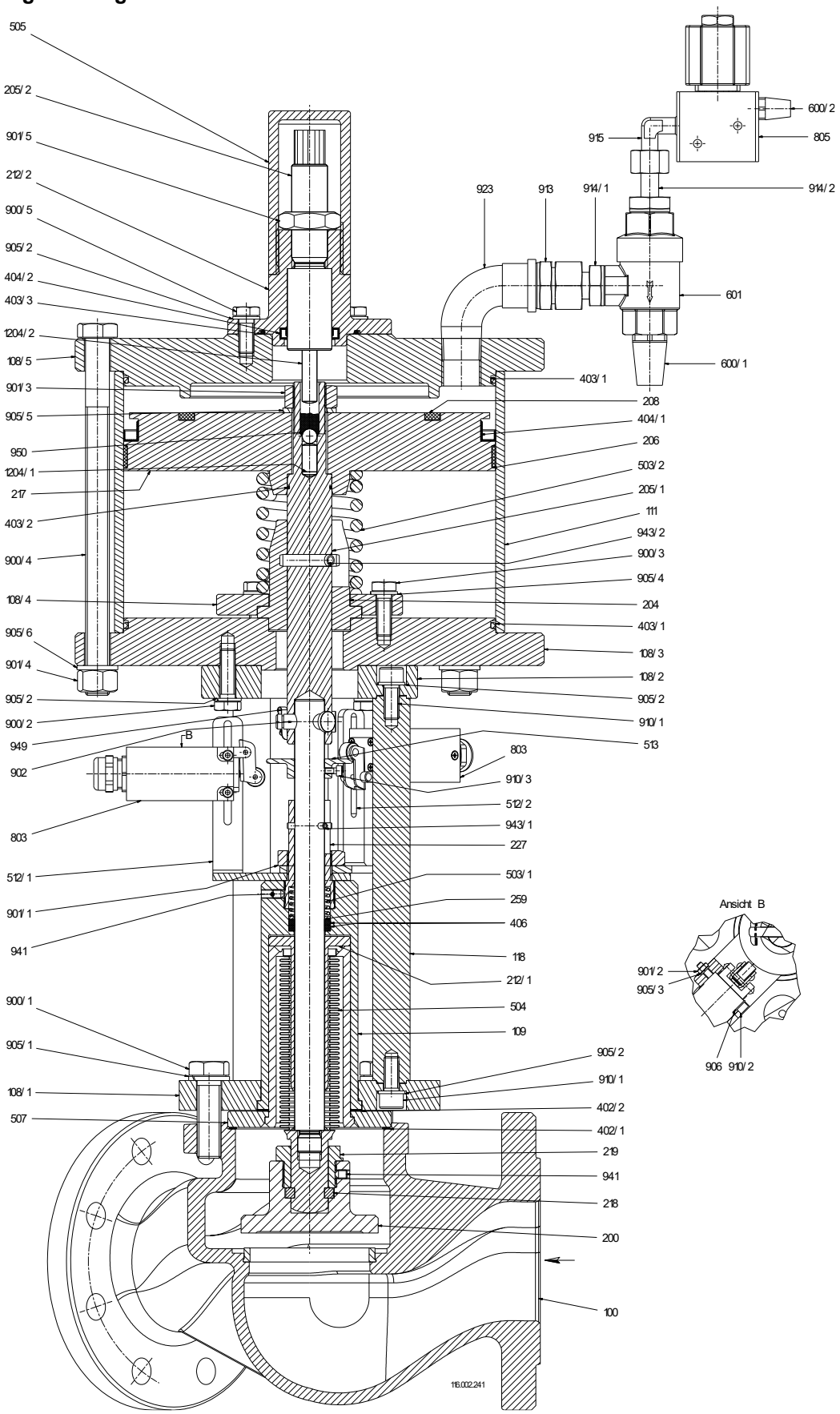

Fig.3 Flange version **50-4-EPVF 5N.R…**

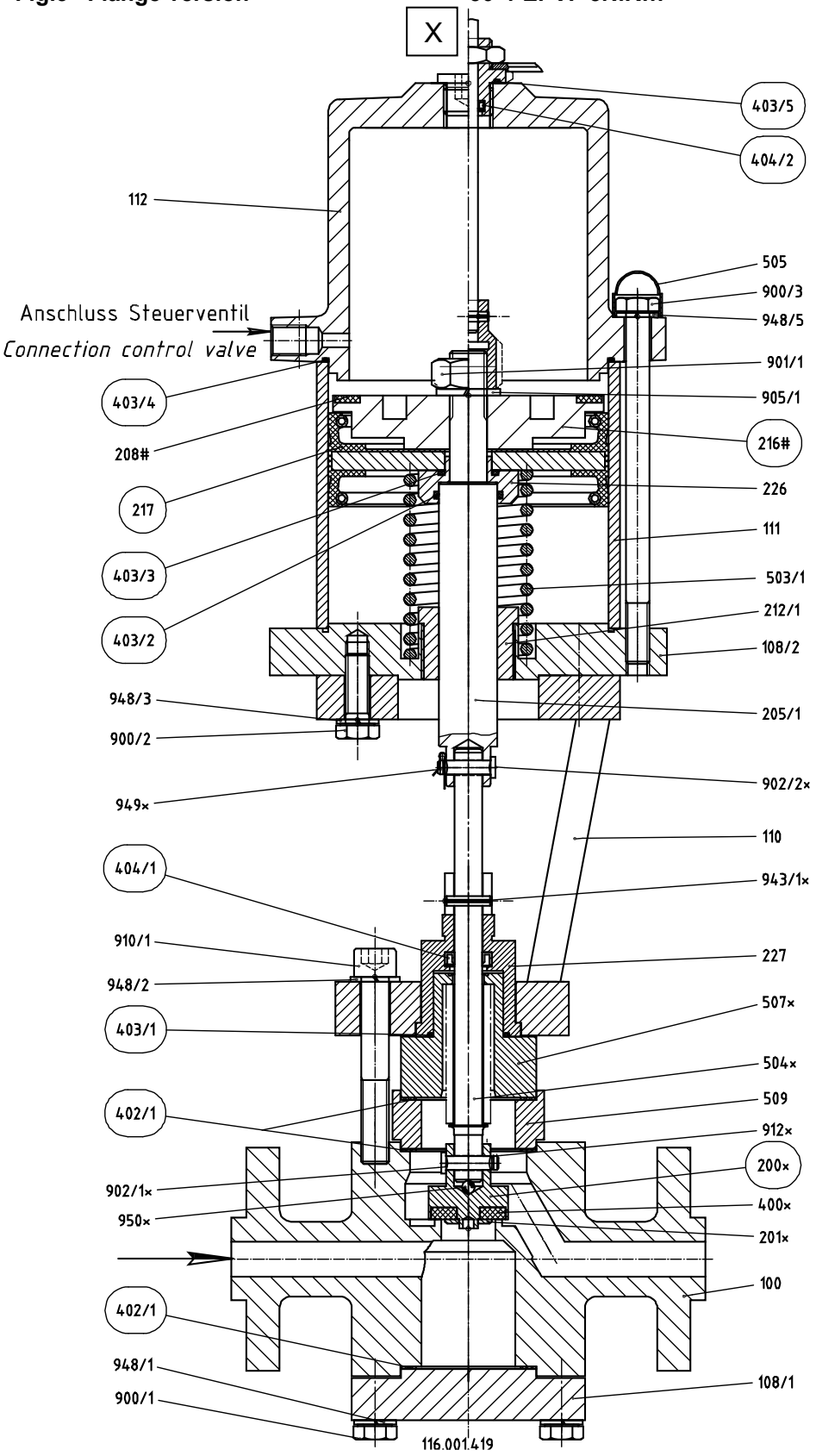

O = Spare part kit
(# or x) supplied as a complete unit

X = Option limit switch mounting

Fig.4 Flange version **55-4-EPVF 5N.R…**

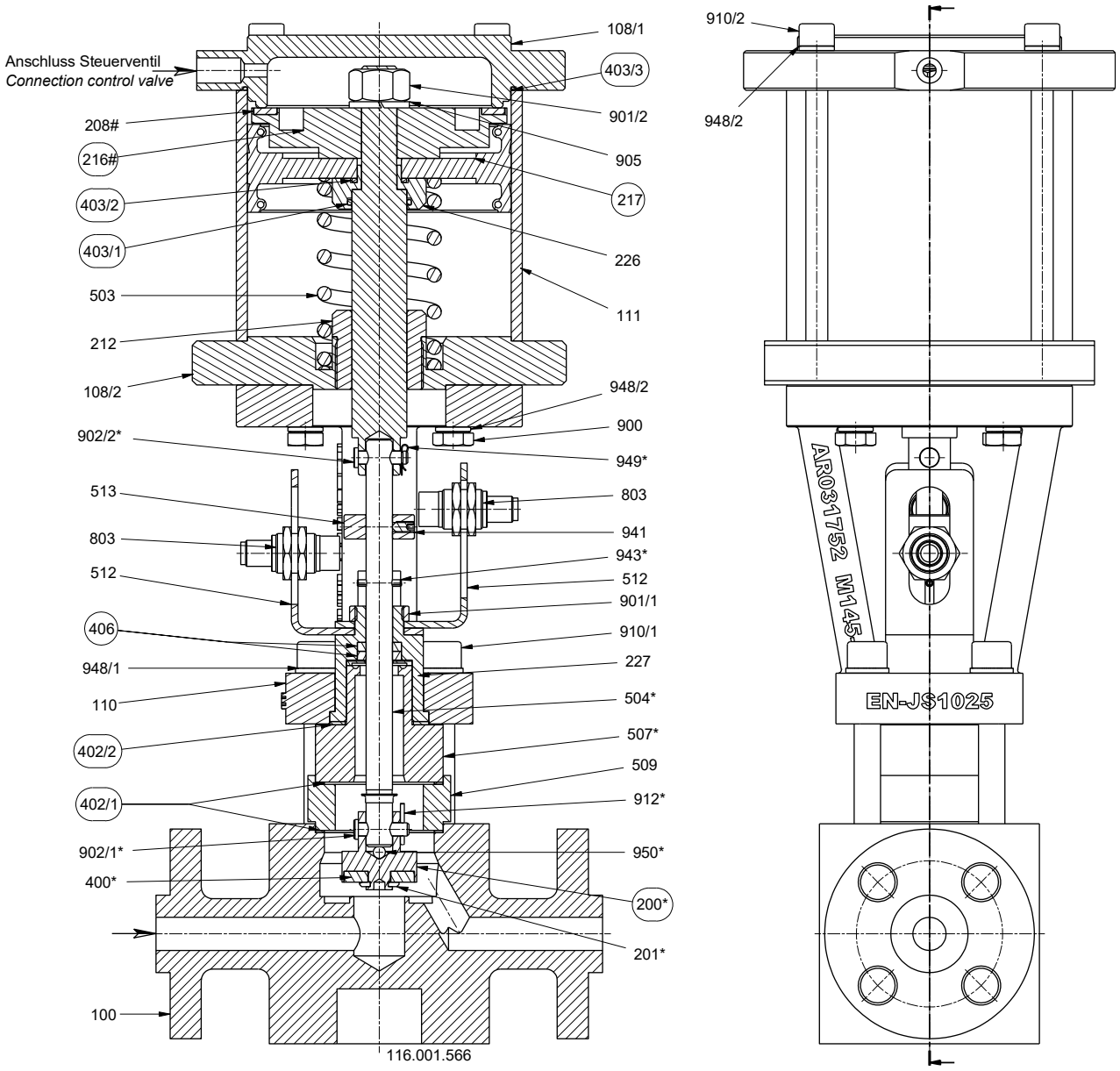

O = Spare part kit
(*) supplied as a complete unit

Fig.5 Thread version **15-4-EPVF 7.R...**

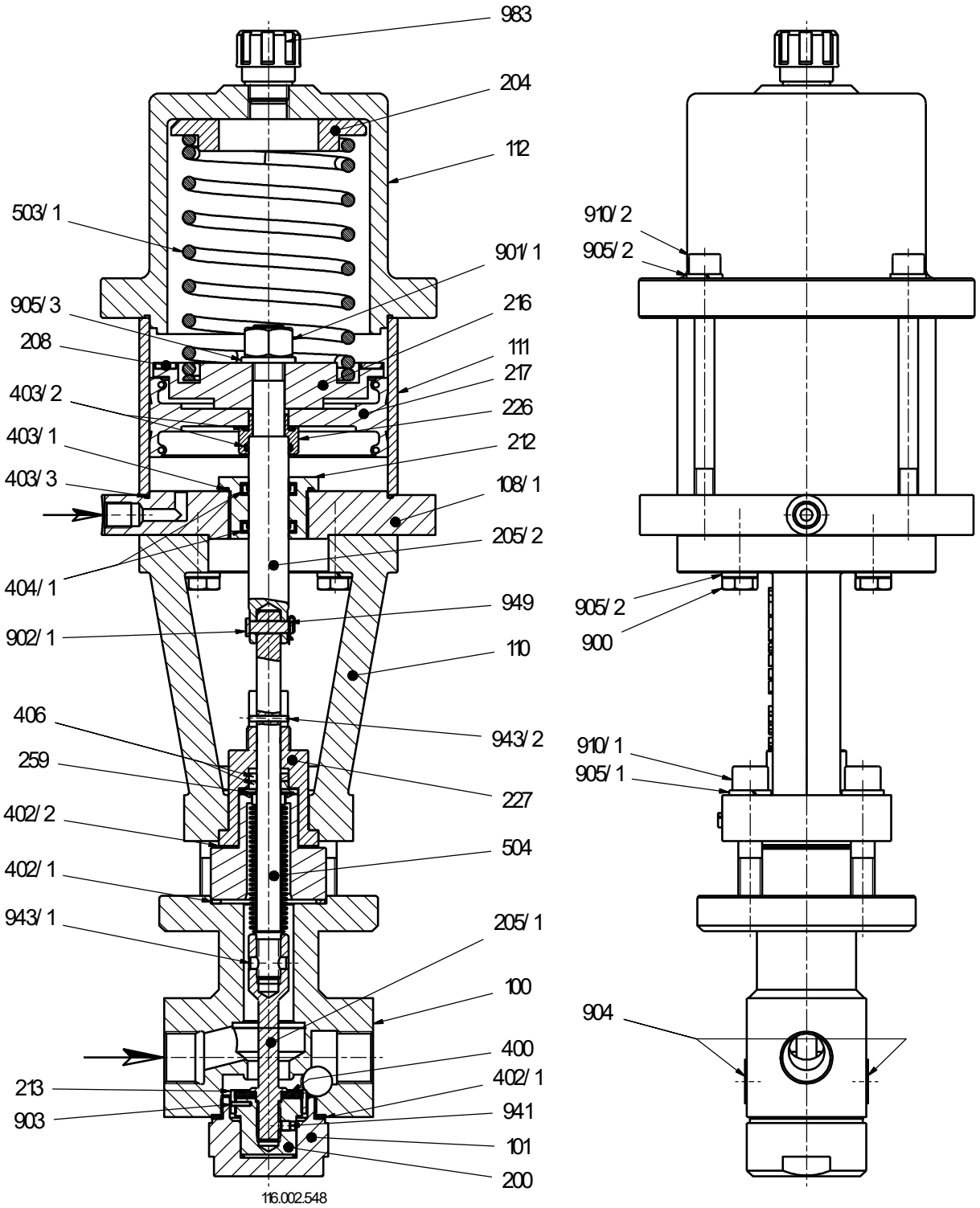

11.2 Projection

Fig.1 Flange version **10-4-EPVF 20N.R… / 40-4-EPVF.R… (DN15 - DN25)**

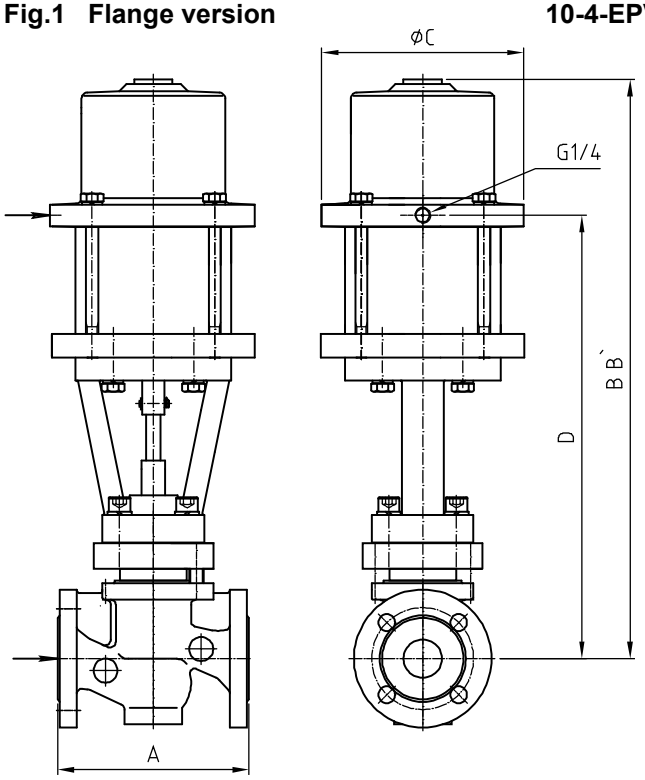

Fig.2 Flange version **15-4-EPVF 30N.R.Bn…**

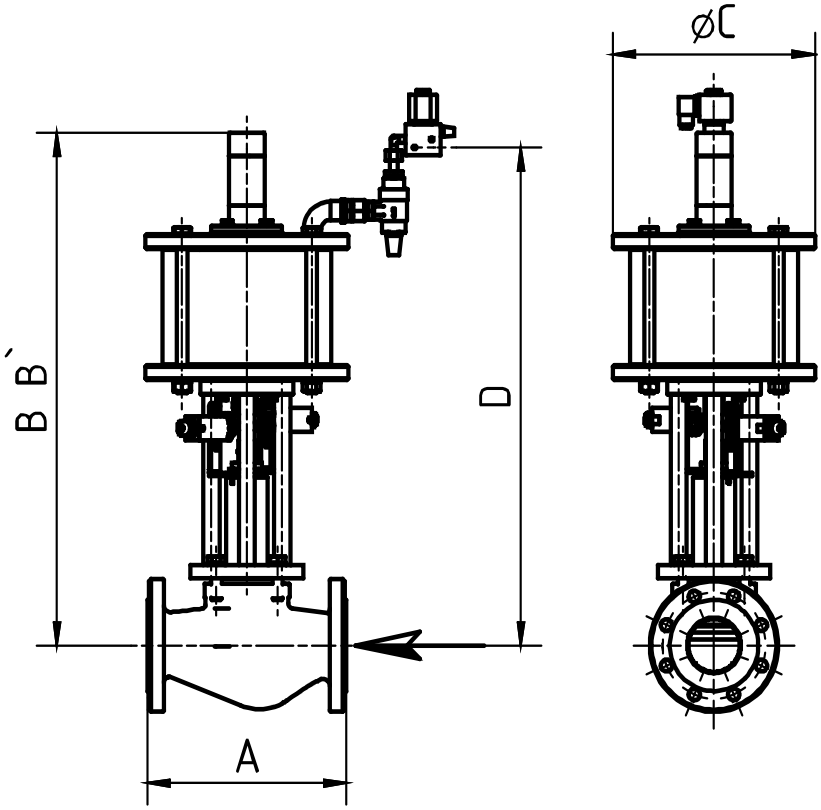

Fig.3 Flange version **50-4-EPVF 5N.R…**

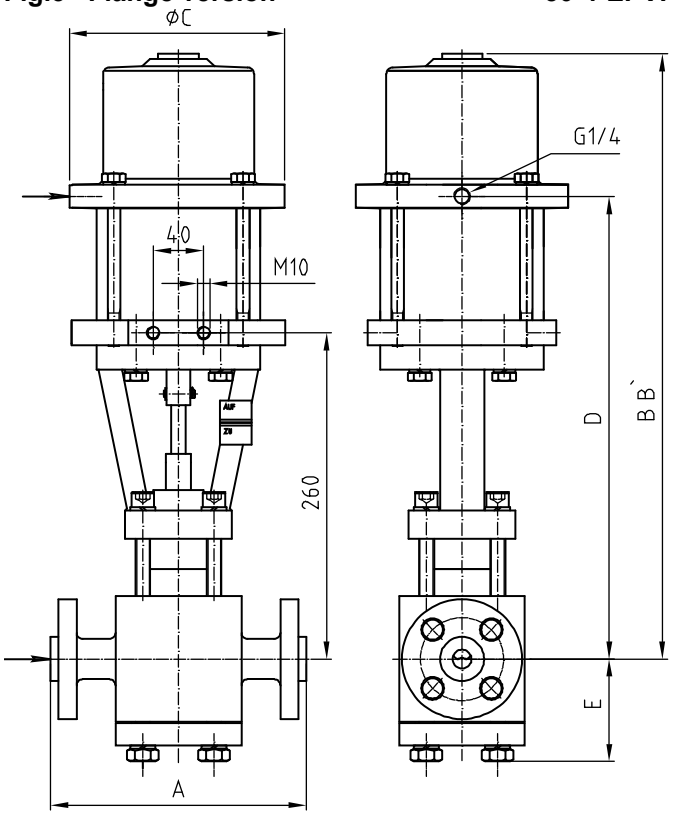

Fig.4 Flange version **55-4-EPVF 5N.R…**

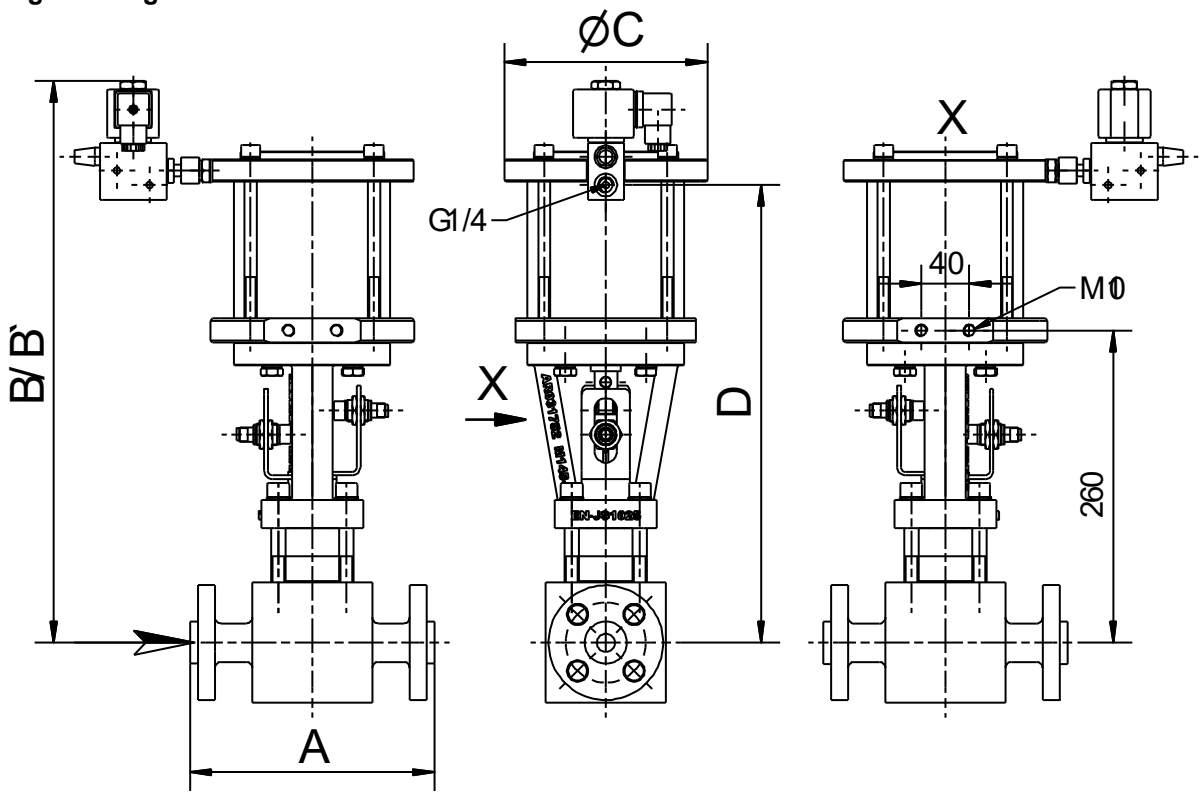

Fig.5 Thread version **15-4-EPVF 7.R…**

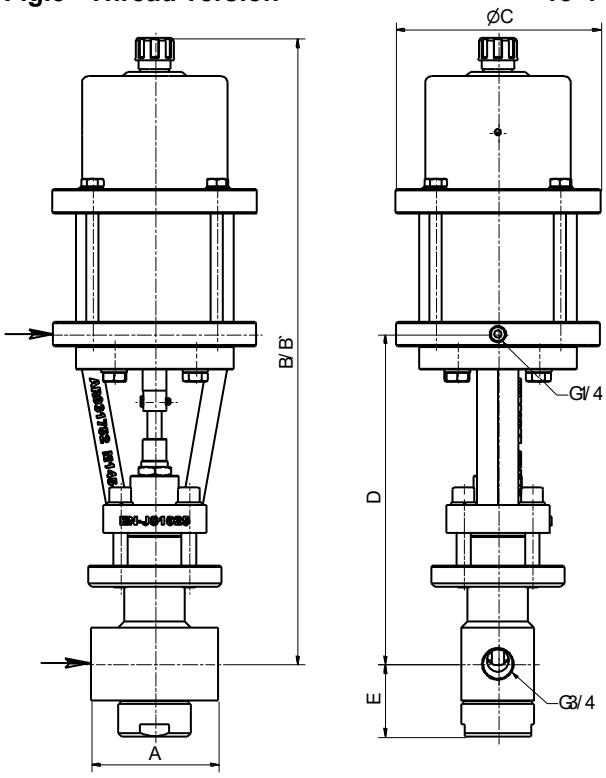

11.3 Control valve

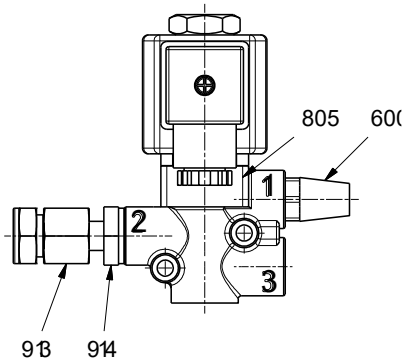

Connection 1 = Ventilation
Connection 2 = Drive
Connection 3 = Control air

11.4 List of parts

Stückliste

list of parts

BTA Nummer 220.100.219 DE / 220.100.220 EN

Instruction No. 220.100.219 DE / 220.100.220 EN

	Pos/Item	116.001452	116.002241	116.001419	116.001566	116.002548	DEU Benennung DEUTSCH	ENG Parts description ENGLISH
1	100	1	1	1	1	1	Ventilgehäuse	valve chamber
2	101					1	Gehäusemutter	housing nut
3	108 / 1	1	1	1	1	1	Gehäuseflansch	housing flange
4	108 / 2	1	1	1	1		Gehäuseflansch	housing flange
5	108 / 3		1				Gehäuseflansch	housing flange
6	108 / 4		1				Gehäuseflansch	housing flange
7	108 / 5		1				Gehäuseflansch	housing flange
8	109		1				Gehäusezylinder	housing cylinder
9	110	1		1	1		Distanzstück	spacer
10	111	1	1	1	1		Pneumatikzylinder	pneumatic cylinder
11	112	1		1		1	Federdom	spring cap
12	118		4				Stützen	supports
13	200	1	1	1	1	1	Ventilteller	valve disk
14	201	1		1	1		Tellerscheibe	disc plate
15	204		1			1	Federführung	spring guide pin
16	205 / 1	1	1	1	1	1	Ventilspindel	valve spindle
17	205 / 2		1			1	Ventilspindel	valve spindle
18	206		1				Führungsring	guide ring
19	208	1	1	1	1	1	Schlagdämpfung	sound insulation
20	212				1	1	Spindelführung	spindle guide
21	212 / 1	1	1	1			Spindelführung	spindle guide
22	212 / 2		1				Spindelführung	spindle guide
23	213	1				1	Gewindering	ring nut
24	216	1		1	1	1	Federteller	spring disc
25	217	1	1	1	1	1	Antriebskolben	drive piston
26	218		1				zweiteiliger Ring	two-piece ring
27	219		1				Spindelmutter	spindle nut
28	226	1		1	1	1	Dichtstück	sealing piece
29	227	1	1	1	1	1	Verdrehschutz	Distort protection
30	259		1			1	Scheibe (Fertigungsteil)	disc (production piece)
31	400	1		1	1	1	Ventiltellerdichtung	valve disk sealing
32	402 / 1	1	1	3	2	2	Flachdichtung	gasket
33	402 / 2		1		1	1	Flachdichtung	gasket
34	403 / 1	1	2	1	1	1	O-Ring	o-ring
35	403 / 2	1	1	1	1	2	O-Ring	o-ring
36	403 / 3	1	1	1	1	1	O-Ring	o-ring
37	403 / 4	1		1			O-Ring	o-ring
38	403 / 5	1#		1#			O-Ring	o-ring
39	404 / 1	1	1	1		2	Lippenring	lip-ring
40	404 / 2	1#	1	1#			Lippenring	lip-ring
41	406		2		2	2	Packung	packing
42	503				1		Druckfeder	pressure spring
43	503 / 1	1	1	1		1	Druckfeder	pressure spring
44	503 / 2		1				Druckfeder	pressure spring
45	504	1	1	1	1	1	Faltenbalg	expansion bellows
46	505		1	4			Schutzkappe	protective cap

Stückliste

list of parts

BTA Nummer 220.100.219 DE / 220.100.220 EN

Instruction No. 220.100.219 DE / 220.100.220 EN

	Pos/Item	116.001.452	116.002.241	116.001.419	116.001.566	116.002.548	DEU Benennung DEUTSCH	ENG Parts description ENGLISH
47	507	1	1	1	1		Faltenbalgstück	bellow piece
48	509			1	1		Distanzring	distance ring
49	512				2		Endschalterkonsole	limit switch console
50	512 / 1		1				Endschalterkonsole	limit switch console
51	512 / 2		1				Endschalterkonsole	limit switch console
52	513		1		1		Endschalterbetätigung	switch actuator
53	600 / 1		1				Schalldämpfer	sound absorber
54	600 / 2		1				Schalldämpfer	sound absorber
55	601		1				Schnellentlüfter	quick-venting mechanism
56	803		2		2		Endschalter	limit switch
57	805		1				Steuerventil	control valve
58	900				4		Sechskantschraube	hexagon head screw
59	900 / 1	4	4	4			Sechskantschraube	hexagon head screw
60	900 / 2	4	4	4			Sechskantschraube	hexagon head screw
61	900 / 3		4	4			Sechskantschraube	hexagon head screw
62	900 / 4		4				Sechskantschraube	hexagon head screw
63	900 / 5		4				Sechskantschraube	hexagon head screw
64	901 / 1	1	1	1	1	1	Sechskantmutter	hexagon nut
65	901 / 2	1	4		1		Sechskantmutter	hexagon nut
66	901 / 3		1				Sechskantmutter	hexagon nut
67	901 / 4		4				Sechskantmutter	hexagon nut
68	901		1				Sechskantmutter	hexagon nut
69	902		1				Bolzen	bolt
70	902 / 1	1		1	1	1	Bolzen	bolt
71	902 / 2	1		1	1		Bolzen	bolt
72	903	1				1	Kerbstift	grooved dowel pin
73	904					1	Verschlußschraube	srewed plug
74	905				1		Federring	lock washer
75	905 / 1	4	4	1		4	Federring	lock washer
76	905 / 2	4	16			8	Federring	lock washer
77	905 / 3	8	4			1	Federring	lock washer
78	905 / 4	1	4				Federring	lock washer
79	905 / 5		1				Federring	lock washer
80	905 / 6		4				Federring	lock washer
81	906		4				Scheibe	washer
82	910 / 1	4	8	4	4	4	Zylinderschraube	cylinder head screw
83	910 / 2	4	4		4	4	Zylinderschraube	cylinder head screw
84	910 / 3		1				Zylinderschraube	cylinder head screw
85	912	1		1	1		Splint	split-pin
86	913		1				Gerade Einschraubverschraubung	Linear threaded screw connection
87	914 / 1		1				Gerader Aufsteckstutzen	Linear put on adapter
88	914 / 2		1				Gerader Aufsteckstutzen	Linear put on adapter
89	915		1				Ringmutter (Nennweitenabhängig)	ring nut (depending on dimension)
90	923		1				Gewindestift	setscrew
91	926		2				Spannstift	spring dowel sleeve

Stückliste

list of parts

BTA Nummer 220.100.219 DE / 220.100.220 EN

Instruction No. 220.100.219 DE / 220.100.220 EN

	Pos/Item	116.001.452	116.002.241	116.001.419	116.001.566	116.002.548	DEU Benennung DEUTSCH	ENG Parts description ENGLISH
92	941		2		1	1	Spannstift	spring dowel sleeve
93	943				1		Spannstift	spring dowel sleeve
94	943 / 1	1	1	1		1	Spannstift - Schwere Ausführung	spring dowel sleeve - solid version
95	943 / 2	1	1			1	Spannstift - Schwere Ausführung	spring dowel sleeve - solid version
96	948 / 1			4	4		Nordlockscheibe	Nordlock washer
97	948 / 2			4	8		Nordlockscheibe	Nordlock washer
98	948 / 3			4			Nordlockscheibe	Nordlock washer
99	948 / 4						Nordlockscheibe	Nordlock washer
100	948 / 5			4			Nordlockscheibe	Nordlock washer
101	949	1	1	1	1	1	SL-Sicherung	SL-retainer
102	950	1	1	1	1		Kugel	ball
103	983					1	Entlüftungsstopfen	exhaust plug
104	1204 / 1		1				Zylinderstift	cylinder pin
105	1204 / 2		1				Zylinderstift	cylinder pin

Spare parts

Type	Fig.	Spare parts
10-4-EPVF 20N.R… / 40-4-EPVF.R… (DN15 - DN25)	Fig.1	Spare part kit
50-4-EPVF 5N.R…	Fig.3	Spare part kit
55-4-EPVF 5N.R…	Fig.4	Spare part kit

Dimension

Series	DN / Class	A	ANSI	B	B`	ØC	D	E
10-4-EPVF…R	**50**	230	**2“**	517	637	170	403	-
15-4-EPVF…R.Bn	**80**	310	**3“**	774	924	315	755	
40-4-EPVF…R	**15**	130	**1/2"**	502	622	170	383	-
	20	150	**3/4"**	502	622	170	383	-
	25	160	**1“**	502	622	170	383	-
50-4-EPVF…R	**600 lbs**	203	**1/2"**	482	602	170	368	82
55-4-EPVF…R	**600 lbs**	203	**1/2"**	409	529	170	393	-

Dimension

Series	G	A	B	B`	ØC	D	E
15-4-EPVF…R	**3/4**	105	517	637	170	273	60

A = Dimension at DIN (resp. flanges ANSI and dimension DIN or flanges and dimension at DIN)
B`= Dimension for removing the drive piston