Uni-Geräte E. Mangelmann
Elektrotechnische Fabrik GmbH
Holtumsweg 13, 47652 Weeze, Germany

Operating manual

Solenoid-Actuator

Series MG/MG...Xn

Not explosion proof / Ex-Zone 2

EN

+49 (0) 2837/9134-0 info@uni-geraete.com www.uni-geraete.com

Uni-Geräte E. Mangelmann
Elektrotechnische Fabrik GmbH
Holtumsweg 13, 47652 Weeze, Germany

Operating manual

Contents

1.0 General remarks
1.1 Solenoid actuator data
1.2 Explosion protection

2.0 Electrical connection

3.0 Operation

4.0 Solenoid actuators
4.1 MG… / MG…Xn
4.2 MG…A / MG…A…Xn with internal controller TS900, TS1500
4.3 MG…A5 / MG…A5…Xn with internal controller TS200
4.4 MG...A / MG...A...Xn with external controller RKS 5-1500
4.5 MG…A / MG…A…Xn with external controller RKS 5-4000

5.0 Allocation of connection plan

6.0 Protective conductor connection

7.0 Dismantling of the solenoid actuator

8.0 Explanations on codes and directives

9.0 Drawing

Operating manual

1.0 General remarks

Valve / solenoid actuator combinations are delivered fully assembled and tested as standard. **Additionally, the adeqaute operating instructions of each special fitting-series must be considered.** When solenoid actuators are replaced or changed, it must be ensured that combination with a Uni-fitting is approved and that the magnet is properly attached to the fitting (e.g. with the permissible tightening torque). The device-specific serial number and the year of manufacture can be found on the nameplate for clear identification.
Solenoid actuators are electrotechnical components which cannot be operated without an associated fitting, and may not be operated on their own!
Always use solenoid actuators with IP65 with a rain protection cover for outdoor installations. Solenoid actuators which are obviously damaged must not be installed and must be replaced. If the solenoid actuators are exposed to special types of external stress, additional protective measures are required and must be provided by the operator. Any modifications to the device (which are undefined or have not been agreed) can have a negative influence on the explosion protection, and in the worst case it may even be cancelled out altogether. Uni Geräte does not accept liability for damage (to the device / beyond) caused by modification(s) to the device.
The same applies to warranty claims.

1.1 Solenoid actuator data

Manufacturer:
Uni-Geräte E. Mangelmann Elektrotechnische Fabrik GmbH
Holtumsweg 13, 47652 Weeze, Germany

Designation:

Series MG…	not explosion proof
Series MG…Xn	for intended use in Ex-Zone 2 in accordance with directive 2014/34/EU

Protection type:		IP54 or IP65
Medium temperature:	Magnetic core with media contact	-20 °C to +60 °C
	Magnetic core without media contact	no influence
Ambient temperature:		-20 °C to +60 °C
Duty cycle:		100 %
Mains frequency for AC version:		40 to 60 Hz

Description of the device
The solenoid actuator (pot magnet) is used as a drive unit for valves. The solenoid actuator is designed in the form of a magnetic housing (pipe, base, magnetic plate and cover), a coil and electronics if necessary. Depending on the version, the solenoid actuator can be operated with direct or alternating voltage. A rectifier is built into the AC voltage version. The various types of coil therefore always have direct current flowing through them when they are live. The MG… solenoid actuators have a conventional coil with one winding and the resulting average permanent attraction forces with average power consumption during continuous operation. The type MG… A .. solenoid actuators, on the other hand, have two windings on their coil body, a pull-in winding and a hold-in winding. The associated TS… / RKS… valve controller switches from the pull-in winding to the hold-in winding or from higher to lower power after a defined time. In this way, very high pull-in forces can be provided for short periods, whilst achieving low power consumption during continuous hold-in operation.

1.2 Explosion protection

Explosion protection is optional, and is identified by an Ex type plate on the solenoid actuator. The solenoid actuators and the internally installed solenoid valve controllers correspond to ignition protection type "ec" in device category II3G, and can be used in areas in which explosive gas, vapour / mist or air mixtures are not expected during normal operation, and if they do occur it will only be on rare occasions or for a short period, i.e. in Ex zone 2. The electrical and thermal parameters of the individual variants can be found on the nameplate. The explosion protection relates to operation. The relevant explosion protection regulations must be observed during installation, maintenance or repair, particularly EN 60079-14 (VDE 0165-1). The electrical installation must be carried out by a qualified electrician or under the supervision thereof, taking the relevant national regulations into consideration (in Germany VDE 0100). Prior to installation, the device specifications must be compared with the intended operating conditions in order to ensure that proper operation takes place.

2.0 Electrical connection

- The diameter range / clamping range of the cable gland must be observed and adhered to.
- When flexible connecting cables are being used, insulated wire end sleeves with plastic collars in accordance with DIN 46228-4 must be used. The possible range of the connecting cable conductor cross-section can be found in chapter 5.0 "Allocation of connection plan" .
- The supply voltage at the solenoid actuator must be within the range of -15% to + 10% of the nominal voltage. Connection plan "AP xx", which applies to the selected version of the solenoid actuator, must be taken into consideration for the connection.
- The magnet housing cover must be reassembled with care in order to guarantee the IP protection class. Versions which are delivered with a connecting cable from the factory are ready for use, i.e. the terminal compartment does not need to be opened.
- Solenoid actuators with temperatures of higher than 70 °C at the cable lead-in or more than 80 °C at the lead branching point are also marked with a sign below the cable lead-in. Only heat-resistant connecting cables with an upper operating temperature of at least 100 °C may then be used to make the connection.
- The solenoid actuators must be protected against the dangerous effects of short circuits, earth faults and overloading. Upstream protective devices must be of a type which prevents automatic restarting under fault conditions. Their rated voltage must be equal to or greater than the nominal voltage of the solenoid actuator. Their breaking capacity must be equal to or greater than the maximum short-circuit current which can be assumed at the installation site (usually 1500 A).
- An upstream fuse may be used for protecting the device. In that case, it must be rated with a maximum of 3 times the nominal current of the solenoid actuator (in accordance with IEC 60127-1). If the rated current is very small, the fuse with the smallest current value in accordance with the specified IEC standard must be selected. With solenoid actuators with pull-in/hold-in control (MG… A…), the higher value (pull-in current) must be taken into consideration.
- Alternatively, an upstream motor protection switch with overload and short-circuit tripping may be used. It must be set to the nominal current of the solenoid actuator. With solenoid actuators with pull-in/hold-in control (MG… A…), the higher value (pull-in current) must be taken into consideration. Based on its characteristic curve, the motor protection switch must be set so that it trips after 10…20 s with a pull-in current.

- The length and cross-section of the connecting cable should be dimensioned so that a maximum voltage drop of 4% (in accordance with VDE 0100-520) is not exceeded. The “Recommended maximum cable length” tables for the respective drive types can be used for the calculation.
- If a silicone (or silicone-containing) connecting cable or a cable that is not scratch-resistant is being used, it must be protected against mechanical damage (e.g. by an interrupted tube system with edge protection).
- A maximum permissible ripple of 20% applies to all solenoid actuators with the direct current design.

NOTICE!
The points mentioned correspond to the specific conditions of operation in the MG…Xn version.

3.0 Operation

100% duty cycles are also permitted at the maximum ambient temperatures.



DANGER!
The solenoid actuator may become hot during operation. Risk of injury when touched!

During operation, it must be ensured that neither the maximum permissible ambient and medium temperature nor the maximum permissible supply voltage level are exceeded. The surface temperature of the Xn series drives must not exceed the values of the temperature class specified on the nameplate. The solenoid actuator must be protected from inadmissible heating if necessary. All solenoid actuators are wired with a protective measure to reduce the induction voltage. To avoid potentially damaging induction voltage, the user must take suitable measures that go beyond the built-in protective measures if necessary.

Operating manual

4.0 Solenoid actuators

4.1 MG… / MG…Xn

Type MG...	P* W	Nominal current A** (DC)								
		12 VDC	24 VDC	48 VDC	60 VDC	110 VDC	125 VDC	220 VDC	230 VDC	240 VDC
004	10	0.8	0.4	0.2	0.2	0.1	0.1	0.05	0.04	0.04
005-3	15	1.3	0.6	0.3	0.3	0.1	0.1	0.07	0.07	0.06
008-2	30	2.5	1.3	0.6	0.5	0.3	0.2	0.1	0.1	0.1
010	40	3.3	1.7	0.8	0.7	0.4	0.3	0.2	0.2	0.2
012	50	4.2	2.1	1.0	0.8	0.5	0.4	0.2	0.2	0.2
014	70	5.8	2.9	1.5	1.2	0.6	0.6	0.3	0.3	0.3
016	90	7.5	3.8	1.9	1.5	0.8	0.7	0.4	0.4	0.4
018	125	-	5.2	2.6	2.1	1.1	1.0	0.6	0.5	0.5
019	160	-	6.7	3.3	2.7	1.5	1.3	0.7	0.7	0.7
020.1	250	-	-	-	-	-	-	1.1	1.1	1.0

Type MG...	P* W	Nominal current A** (AC)						
		24 VAC	48 VAC	110 VAC	120 VAC	220 VAC	230 VAC	240 VAC
004	10	0.4	0.2	0.1	0.1	0.05	0.04	0.04
005-3	15	0.6	0.3	0.1	0.1	0.07	0.07	0.06
008-2	30	1.3	0.6	0.3	0.3	0.1	0.1	0.1
010	40	1.7	0.8	0.4	0.3	0.2	0.2	0.2
012	50	2.1	1.0	0.5	0.4	0.2	0.2	0.2
014	70	2.9	1.5	0.6	0.6	0.3	0.3	0.3
016	90	3.8	1.9	0.8	0.8	0.4	0.4	0.4
018	125	5.2	2.6	1.1	1.0	0.6	0.5	0.5
019	160	6.7	3.3	1.5	1.3	0.7	0.7	0.7
020.1	250	-	-	-	-	1.1	1.1	1.0

* Rated power

** Nominal current at nominal voltage and ambient temperature of 20 °C, 100% duty cycle, stationary heated (with ambient temperature of 20 °C at the switch-on moment → nominal current x 1.25)

Switching frequency: 1000 switching operations / hour

Switching frequency with controller GLE250: 20 switching operations / hour

Operating manual

Recommended maximum cable length

Cable length for a maximum voltage drop of 4% in accordance with VDE 0100-520

Type MG...	Length factor* m/mm²									
	12 V	24 V	48 V	60 V	110 V	120 V	125 V	220 V	230 V	240 V
004	14	56	225	281	1029	1123	1170	4117	5380	5614
005-3	9	37	150	187	1029	1123	1170	2941	3074	3743
008-2	4.5	17	75	112	343	374	585	2058	2152	2246
010	3.5	13	56	80	257	374	390	1029	1076	1123
012	3	11	45	70	206	281	292	1029	1076	1123
014	2	8	30	47	172	187	195	686	717	749
016	1.5	6	24	37	129	140	167	515	538	561
018	-	4	17	27	94	112	117	343	430	449
019	-	3	14	21	69	86	90	294	307	321
020.1	-	-	-	-	-	-	-	187	196	225

* Line length = length factor x line cross-section

Calculation of maximum line length and required line cross-section

The maximum line length results from multiplying the value in the table with the selected line cross-section.

Example: Type: MG 012 230 VAC
Selected line cross-section: 1.5 mm²
→ Maximum line length = 1076 m/mm² x 1.5 mm² = 1614 m

Alternatively, the required line cross-section can be determined by dividing the specified line length by the value in the table:

Example: Type: MG 018 110 VDC
Specified line length: 200 m
→ Required line cross-section = 200 m / 94 m/mm² = 2.13 mm²
→ Selected line cross-section: 2.5 mm²

Operating manual

Connection plan with cable gland in accordance with DIN EN 62444

Type MG…	Size	Cabel Ø mm	
		Standard	Xn
004, 005-3, 008-2	M16 x 1.5	5 – 9	4 - 8
010 - 020.1	M20 x 1.5	8 - 13	5.5 - 13



AP 01: DC version

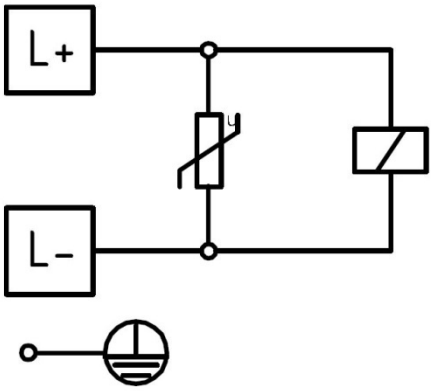

AP 02: AC version with rectifier SKB-25/16

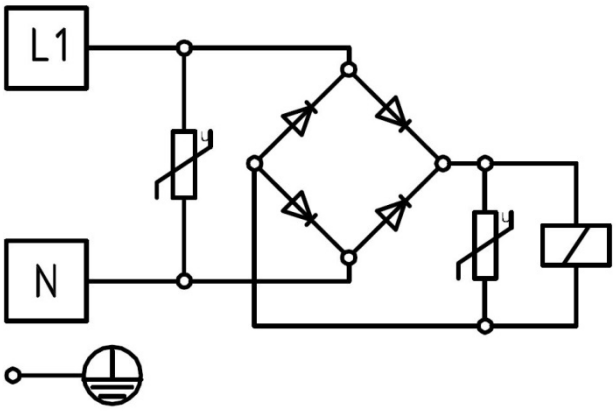

AP 11: AC version with GL05-2, GL08

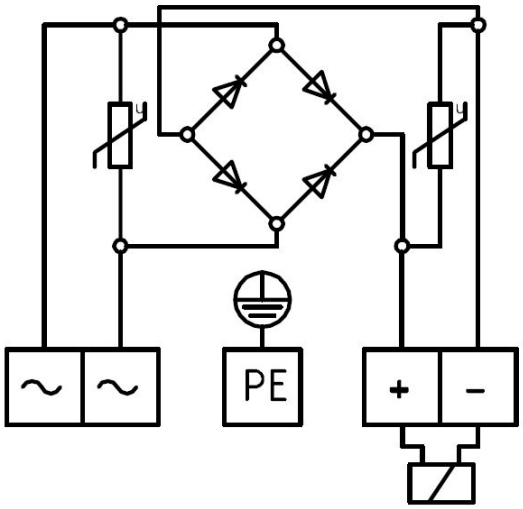

AP 13: AC/DC version with GLE250

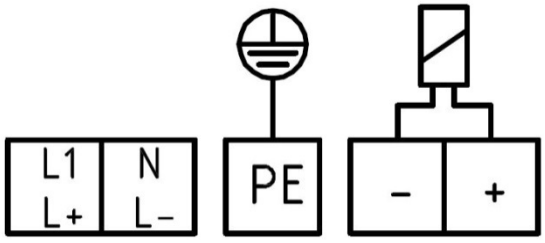

Operating manual

Connection plan with connector DIN EN 175301-803

NOTICE!
Not available in version MG…Xn!



AP 08: DC version

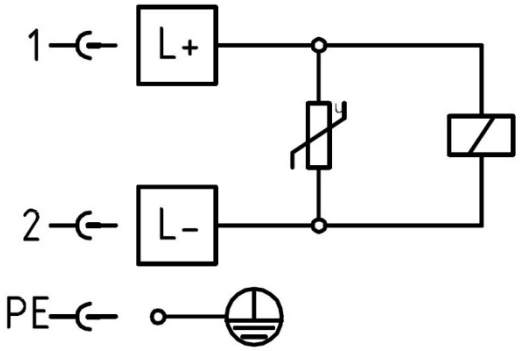

AP 06: AC version, rectifier in connetcor

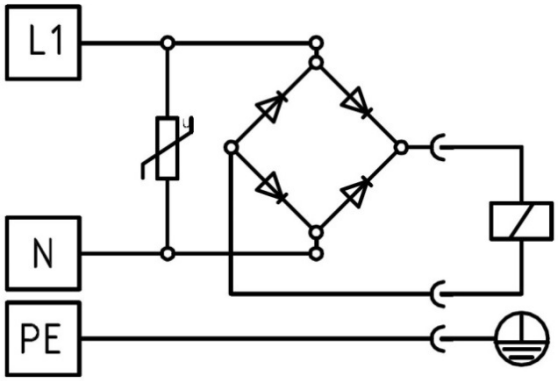

AP 12: AC version with GL05-2, GL08

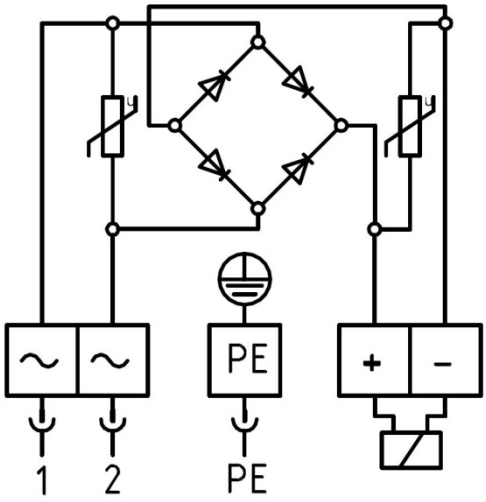

AP 10: AC version with rectifier SKB-25/16

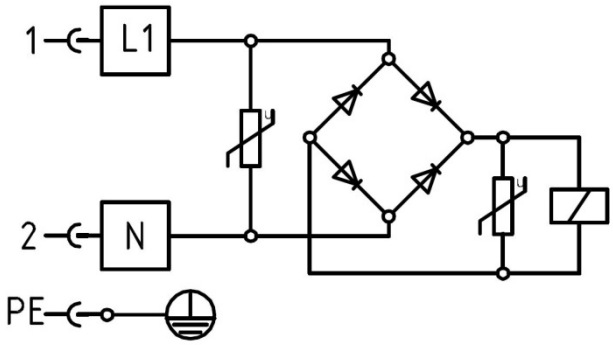

AP 14: AC/DC version with GLE250

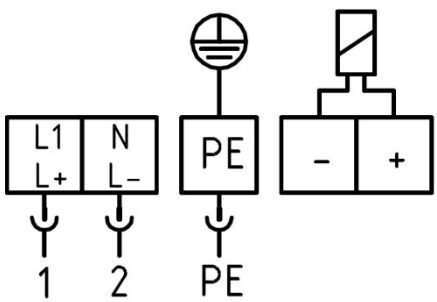

Operating manual

Connection plan with connector DIN EN 175301-801 / Harting R 15

NOTICE!
Not available in version MG…Xn!



AP 08: DC version

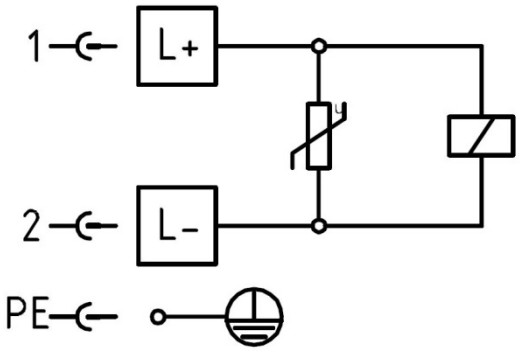

AP 10: AC version with rectifier SKB-25/16

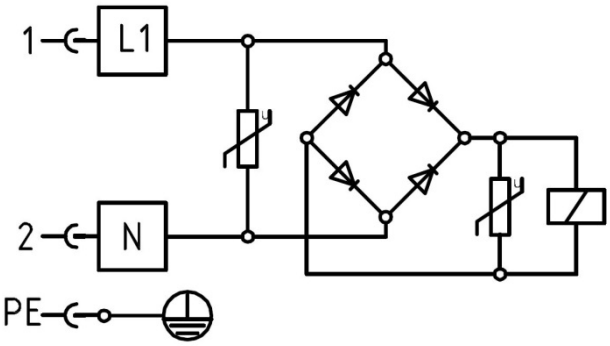

AP 12: AC version with GL05-2, GL08

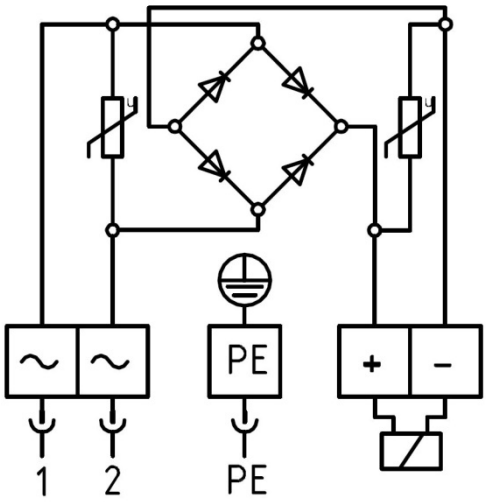

AP 14: AC/DC version with GLE250

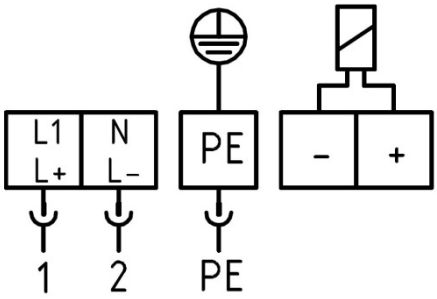

4.2 MG…A / MG…A…Xn with internal controller TS900, TS1500

Type MG…A...	P* W	Nominal current A**								
		TS 900	TS 1500							
		24 VDC	110 VDC	220 VDC	230 VDC	240 VDC	110 VAC	120 VAC	230 VAC	240 VAC
016-A	720/70	30/2,9	6,5/0,6	3,3/0,3	3,1/0,3	3,0/0,3	6,5/0,6	6,0/0,6	3,1/0,3	3,0/0,3
018-A1	900/70	38/2,9	8,2/0,6	4,1/0,3	3,9/0,3	3,8/0,3	8,2/0,6	7,5/0,6	3,9/0,3	3,8/0,3
018-A2	1200/70	-	11/0,6	5,5/0,3	5,2/0,3	5,0/0,3	11/0,6	10/0,6	5,2/0,3	5,0/0,3
019-A1	1200/120	-	11/1,1	5,5/0,5	5,2/0,5	5,0/0,5	11/1,1	10/1,0	5,2/0,5	5,0/0,5
019-A2	1500/90	-	14/0,8	6,8/0,4	6,5/0,4	6,3/0,4	14/0,8	13/0,8	6,5/0,4	6,3/0,4
019-A5	200/20	8,3/0,8	1,8/0,2	0,9/0,1	0,9/0,1	0,8/0,1	1,8/0,2	1,7/0,2	0,9/0,1	0,8/0,1
019-A5.2	200/50	8,3/2,1	1,8/0,5	0,9/0,2	0,9/0,2	0,8/0,2	1,8/0,5	1,7/0,4	0,9/0,2	0,8/0,2
019-A5.3	400/20	17/0,8	3,6/0,2	1,8/0,1	1,7/0,1	1,7/0,1	3,6/0,2	3,3/0,2	1,7/0,1	1,7/0,1
019-A5.4	400/50	17/2,1	3,6/0,5	1,8/0,2	1,7/0,2	1,7/0,2	3,6/0,5	3,3/0,4	1,7/0,2	1,7/0,2

* Rated power

** Nominal current at nominal voltage and ambient temperature of 20 °C, 100% duty cycle, stationary heated (with ambient temperature of 20 °C at the switch-on moment → nominal current x 1.25)

Switching frequency: 20 switching operations / hour
Changeover time: 3 seconds
Changeover time with opening delay: 10 seconds

Recommended maximum cable length

Cable length for a maximum voltage drop of 4% in accordance with VDE 0100-520

Type MG...A…	Length factor* m/mm²					
	24 V	110 V	120 V	220 V	230 V	240 V
016-A	1	16	19	62	69	75
018-A1	1	13	15	50	55	59
018-A2	-	9	11	37	41	45
019-A1	-	9	11	37	41	45
019-A2	-	7	9	30	33	36
019-A5	3	57	66	229	239	281
019-A5.2	3	57	66	229	239	281
019-A5.3	1	29	34	114	127	132
019-A5.4	1	29	34	114	127	132

* Line length = length factor x line cross-section

Operating manual

Connection plan with cable gland in accordance with DIN EN 62444

Type MG…A…	Size	Cabel Ø mm	
		Standard	Xn
010 - 019	M20 x 1,5	8 - 13	5,5 - 13



AP 04: AC or DC version

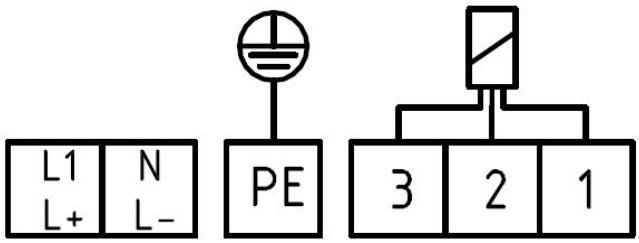

Connection plan with connector DIN EN 175301-803 / DIN EN 175301-801 / Harting R 15

NOTICE!
Not available in version MG…Xn!



AP 03: AC or DC Version

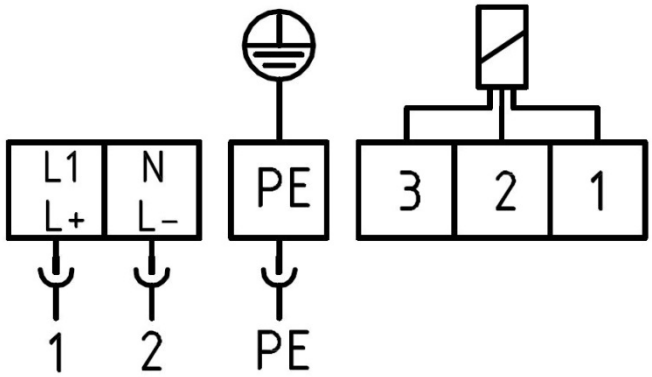

4.3 MG…A5 / MG…A5…Xn with internal controller TS200

Type MG…A5	P* W	Nominal current A** TS 200					
		24 VDC	220 VDC	24 VAC	110 VAC	230 VAC	240 VAC
010-A5	200/20	8.3/0.8	0.9/0.1	8.3/0.8	1.7/0.2	0.9/0.1	0.8/0.1
012-A5							
014-A5							
016-A5							
019-A5							

* Rated power

** Nominal current at nominal voltage and ambient temperature of 20 °C, 100% duty cycle, stationary heated (with ambient temperature of 20 °C at the switch-on moment → nominal current x 1.25)

Switching frequency: 600 operations / hour
Changeover time: 1,5 seconds

Recommended maximum cable length
Cable length for a maximum voltage drop of 4% in accordance with VDE 0100-520

Type MG...	Length factor* m/mm²				
	24 V	110 V	220 V	230 V	240 V
010-A5	3	63	229	239	281
012-A5					
014-A5					
016-A5					
019-A5					

* Line length = length factor x line cross-section

Operating manual

Connection plan with cable gland in accordance with DIN EN 62444

Type MG…A…	Size	Cabel Ø mm	
		Standard	Xn
010 - 019	M20 x 1,5	8 - 13	5,5 - 13



AP 04: AC or DC version

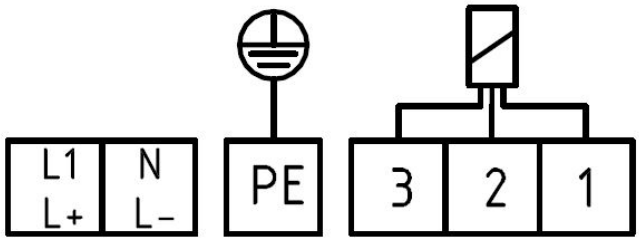

Connection plan with connector DIN EN 175301-803 / DIN EN 175301-801 / Harting R 15

NOTICE!
Not available in version MG…Xn!



AP 03: AC or DC Version

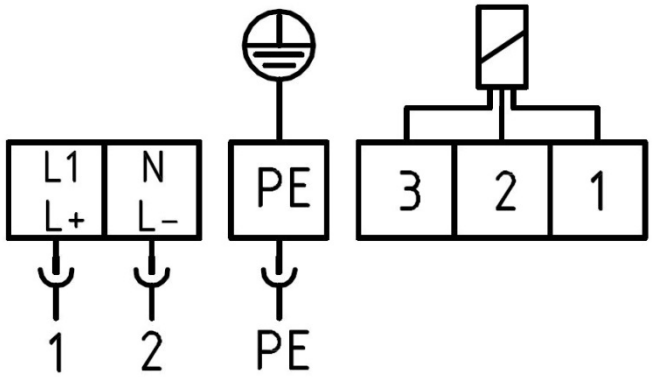

4.4 MG…A / MG…A…Xn with external controller RKS 5-1500

Type	P*	Nominal current A**							
MG...A…	W	100 VDC	110 VDC	125 VDC	205 VDC	240 VDC	110 VAC	120 VAC	230 VAC
018-A1	900/70	9.0/0.7	-	-	4.4/0.3	3.8/0.3	8.2/0.6	-	3.9/0.3
018-A2	1200/70	-	-	-	5.9/0.3	-	-	-	5.2/0.3
019-A1	1200/120	-	-	9.6/1.0	5.9/0.6	5.0/0.5	-	-	5.2/0.5
019-A2	1500/90	15.0/0.9	13.6/0.8	12.0/0.7	7.3/0.4	-	13.6/0.8	13.0/0.8	6.5/0.4

* Rated power

** Nominal current at nominal voltage and ambient temperature of 20 °C, 100% duty cycle, stationary heated (with ambient temperature of 20 °C at the switch-on moment → nominal current x 1.25)

Switching frequency: 20 operations / hour
Changeover time: 3 seconds
Changeover time with opening delay: 10 seconds

Recommended maximum cable length
Cable length for a maximum voltage drop of 4% in accordance with VDE 0100-520

Type	Length factor* m/mm²						
MG...A...	100 V	110 V	120 V	125 V	205 V	230 V	240 V
018-A1	10	13	-	-	44	55	59
018-A2	-	-	-	-	33	41	-
019-A1	-	-	-	12	33	41	45
019-A2	6	8	9	10	26	33	-

* Line length = length factor x line cross-section

Controller RKS 5-1500 is attached directly to the valve in a housing. By customer request, a control unit without a housing is available for installation in a control cabinet.

DANGER!
For solenoid actuators MG...A...Xn, the controller may only be installed in a cabinet outside the Ex zone, separately from the valve!

Operating manual

Connection plan for control cabinet assembly /
Cable gland on solenoid actuator in accordance with DIN EN 62444

Type MG…A…	Size	Cabel Ø mm	
		Standard	Xn
018 - 020	M20 x 1,5	8 - 13	5,5 - 13

Connection plan for valve assembly /
Cable gland on external controller RKS in accordance with DIN EN 62444

Type MG…A…	Size	Cabel Ø mm
		Standard
018 - 020	M20 x 1,5	8 - 13

NOTICE!
Not available in version MG…Xn!



AP 05: AC or DC version

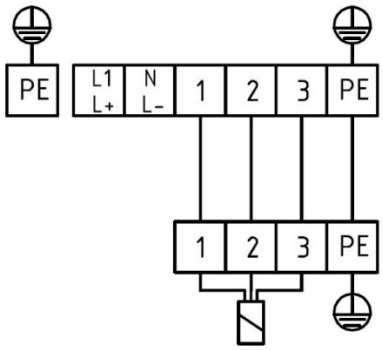

Connection plan for valve assembly / Connector DIN EN 175301-803

NOTICE!
Not available in version MG…Xn!



AP 09: AC or DC version

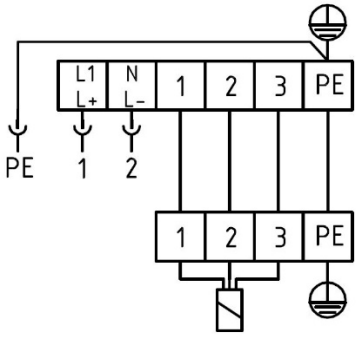

4.5 MG…A / MG…A…Xn with external controller RKS 5-4000

Type MG...A…	P* W	Nominal current A**								
		100 VDC	110 VDC	125 VDC	205 VDC	220 VDC	240 VDC	110 VAC	230 VAC	240 VAC
019-A3	4000/100	-	-	-	19.5/0.5	18.2/0.5	16.7/0.4	-	17.4/0.4	16.7/0.4
019-A3.1	3000/160	-	27.3/1.5	-	14.6/0.8	13.6/0.7	12.5/0.7	-	13.0/0.7	12.5/0.7
020-A1	2000/100	-	18.2/0.9	-	9.8/0.5	9.1/0.5	-	18.2/0.9	8.7/0.4	8.3/0.4
020-A2	3000/125	30.0/1.3	-	-	14.6/0.6	-	-	27.3/1.1	13.0/0.5	-
020-A3	4000/132	40.0/1.3	-	-	19.5/0.6	-	-	36.4/1.2	17.4/0.6	-
020-A3.1	3250/150	-	-	26.0/1.2	-	14.8/0.7	-	-	-	13.5/0.6

* Rated power

** Nominal current at nominal voltage and ambient temperature of 20 °C, 100% duty cycle, stationary heated (with ambient temperature of 20 °C at the switch-on moment → nominal current x 1.25)

Switching frequency: 20 operations / hour
Changeover time: 3 seconds
Changeover time with opening delay: 10 seconds

Recommended maximum cable length
Cable length for a maximum voltage drop of 4% in accordance with VDE 0100-520

Type MG...A...	Length factor* m/mm²						
	100 V	110 V	125 V	205 V	220 V	230 V	240 V
019-A3	-	-	-	10	11	12	13
019-A3.1	-	4	-	13	15	17	18
020-A1	-	6	-	20	23	25	27
020-A2	3	4	-	13	-	17	-
020-A3	2	3	-	10	-	12	-
020-A3.1	-	-	4	-	14	-	17

* Line length = length factor x line cross-section

Controller RKS 5-4000 is attached directly to the valve in a housing. By customer request, a control unit without a housing is available for installation in a control cabinet.

DANGER!
For solenoid actuators MG...A...Xn, the controller may only be installed in a cabinet outside the Ex zone, separately from the valve!

Operating manual

Connection plan for control cabinet assembly /
Cable gland on solenoid actuator in accordance with DIN EN 62444

Type MG…A…	Size	Cabel Ø mm	
		Standard	Xn
018 - 020	M20 x 1,5	8 - 13	5,5 - 13

Connection plan for valve assembly /
Cable gland on external controller RKS in accordance with DIN EN 62444

Type MG…A…	Size	Cabel Ø mm
		Standard
018 - 020	M20 x 1,5	8 - 13

NOTICE!
Not available in version MG…Xn!



AP 05: AC or DC version

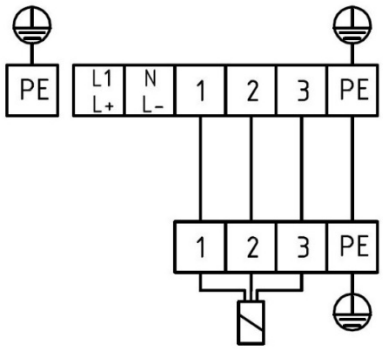

Connection plan for valve assembly / Connector DIN EN 175301-803

NOTICE!
Not available in version MG…Xn!



AP 09: AC or DC version

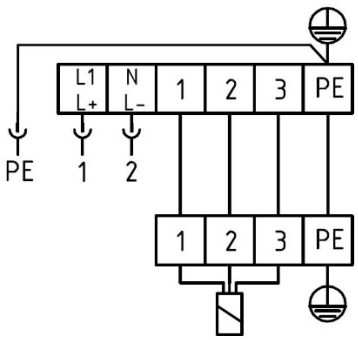

5.0 Allocation of connection plan

Type MG…	Connection	Version	conn.-plan	Conductor cross section mm²
004, 005-3	Cable gland	DC	**AP 01**	0.5 – 2.5
008-2 – 020.1	Cable gland	DC		0.5 – 4.0
010 – 019	Cable gland	AC with rectifier SKB-25/16	**AP 02**	0.5 – 4.0
010 – 019 A…	Connector DIN EN 175301-803	Controller TS200, TS900, TS1500	**AP 03**	0.5 – 1.5
	Connector DIN EN 175301-801			0.75 – 1.0
	Connector Harting R 15			0.75 – 1.0
010 – 019 A…	Cable gland	Controller TS 900	**AP 04**	0.5 – 4.0
		Controller TS 1500, protection type IP 54		0.5 – 2.5
		Controller TS 1500, protection type IP 65		0.5 – 4.0
		Controller TS 200		0.5 – 4.0
018 – 020 A…	Cable gland	Controller RKS 5-1500, RKS 5-4000	**AP 05**	0.5 – 4.0
004 – 020.1	Connector DIN EN 175301-803	AC with rectifier in connector	**AP 06**	0.5 – 1.5
004 – 020.1	Connector DIN EN 175301-803	DC	**AP 08**	0.5 – 1.5
	Connector DIN EN 175301-801			0.75 – 1.0
	Connector Harting R 15			0.75 – 1.0
018 – 020 A…	Connector DIN EN 175301-803	Controller RKS 5-1500, RKS 5-4000	**AP 09**	0.5 – 1.5
010 – 020.1	Connector DIN EN 175301-803	AC with rectifier SKB-25/16	**AP 10**	0.5 – 1.5
	Connector DIN EN 175301-801			0.75 – 1.0
	Connector Harting R 15			0.75 – 1.0
004 – 020.1	Cable gland	AC with GL05-2, GL08	**AP 11**	0.5 – 2.5
004 – 020.1	Connector DIN EN 175301-803	AC with GL05-2, GL08	**AP 12**	0.5 – 1.5
	Connector DIN EN 175301-801			0.75 – 1.0
	Connector Harting R 15			0.75 – 1.0
010 – 020.1	Cable gland	Controller GLE250 24V DC	**AP 13**	0.5 – 4.0
		Controller GLE250 110V AC/DC		0.5 – 2.5
		Controller GLE250 230V AC/DC		0.5 – 2.5
010 – 020.1	Connector DIN EN 175301-803	Controller GLE 250	**AP 14**	0.5 – 1.5
	Connector DIN EN 175301-801			0.75 – 1.0
	Connector Harting R 15			0.75 – 1.0

Operating manual

6.0 Protective conductor connection

The solenoid actuator must always be integrated into the equipotential bonding. A connecting facility for this is available in the vicinity of the solenoid connecting terminal in the terminal compartment.

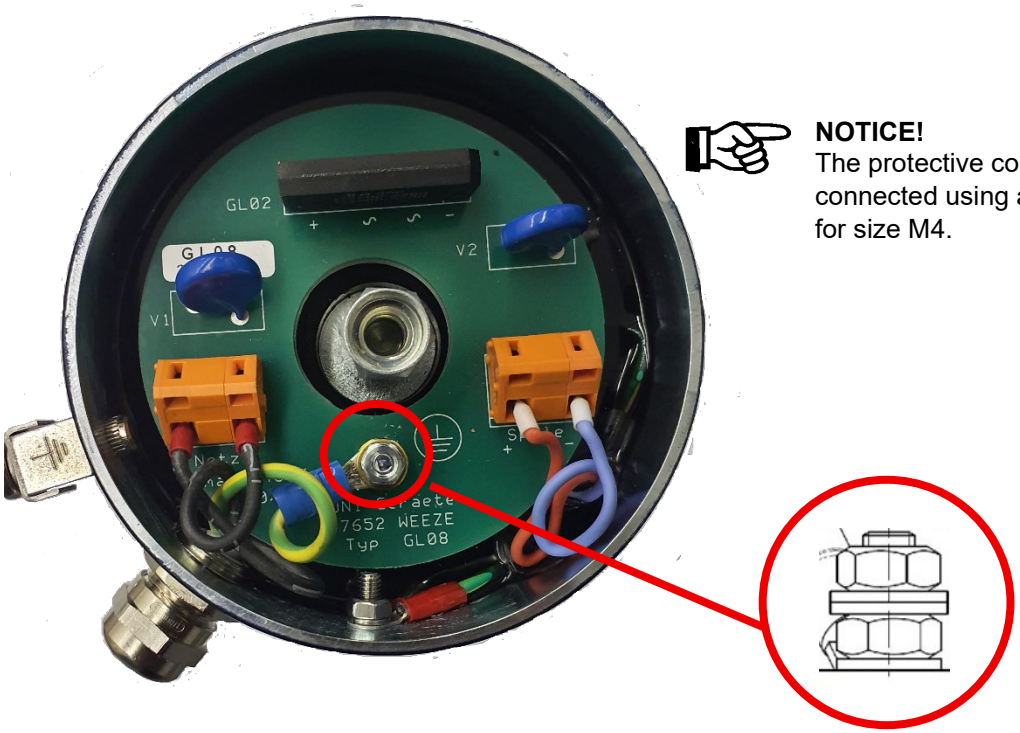

NOTICE!
The protective conductor is connected using a ring cable lug for size M4.

Solenoid actuator Xn- version IP 54 and IP 65**

According to DIN EN 60079-0, solenoid actuators with the "Xn" design have an additional external earth connection as well as the internal protective conductor connection, which are interconnected. The external earth connection is suitable for connecting a maximum of two equipotential bonding conductors with a cross-section of up to 4 mm² each with wire end sleeve. Larger cross-sections can also be connected using a cable lug.

NOTICE!
The solenoid actuator must **also** be earthed at the housing via the external connection.



Minimum cross-sectional area of protective conductors	
Cross-sectional area of the phase conductor of the installation S mm²	Minimum cross-sectional area of the associated protective conductor S mm²
S ≤ 16	S
16 < S ≤ 35	16
S > 35	0,5 S

** Cast with casting resin as far as the terminal strip

7.0 Dismantling of the solenoid actuator

The solenoid actuator must be taken out of operation before dismantling.



DANGER!
The solenoid actuator may become hot during operation. Risk of injury when touched!



DANGER!
De-energize the solenoid actuator housing before opening it!
Observe the electrical safety rules!
The device may only be connected by a qualified electrician!

Solenoid actuator MG 004 – 008

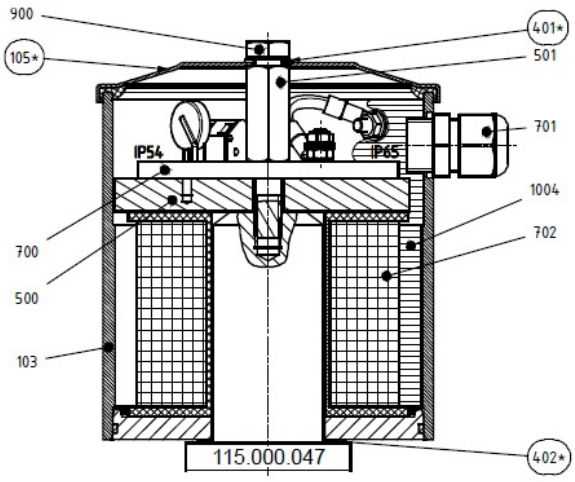

Solenoid actuator MG 010 – 020.1

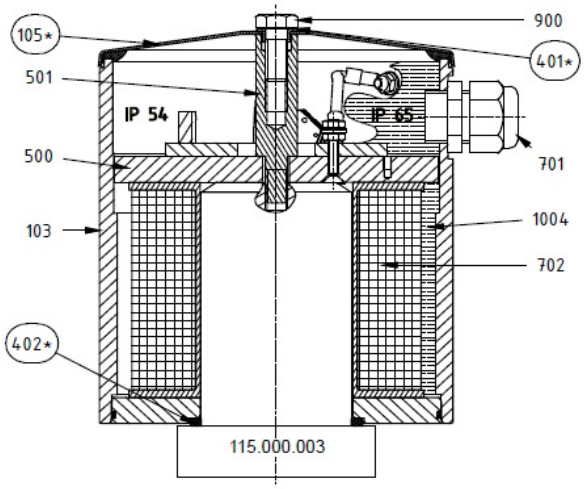

Undo the hexagon bolt (900) and remove it with the integrated insulating sleeve (401*). Remove the magnet housing cover (105*) from the magnet housing (103). Undo and remove the connecting bolt (501).

For the remainder of the removal procedure, see next page.

Item	Designation
103	Magnet housing
105	Magnet housing cover
401	Insulating sleeve
402	Gasket
500	Magnetic disk
501	Connecting bolt
700	Electronics
701	Cable gland
702	Solenoid
900	Hexagon bolt
1004	Casting compound

Operating manual

Solenoid actuator flow-control-butterfly-valve / Solenoid actuator main volume

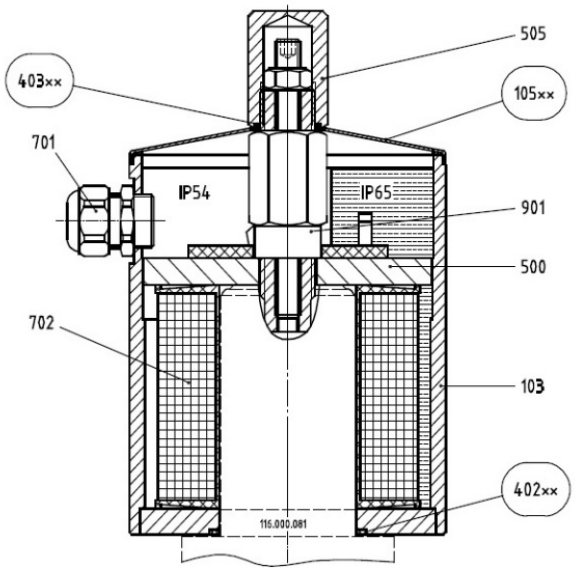

Item.	Designation
103	Magnet housing
105	Magnet housing cover
402	Gasket
403	O-ring
500	Magnetic disk
505	Protective cap
701	Cable gland
702	Solenoid
901	Hexagon nut

Undo protective cap (505) and remove with O-ring (403xx). Remove the magnet housing cover (105xx) from the magnet housing (103). Undo and remove the hexagon nut (901).

Remaining removal procedure (all solenoid actuators)

Then remove the magnet housing (103) complete with the magnetic disk (500) and the solenoid (702) from the upper part of the housing of the solenoid valve or the flow-control-butterfly-valve. The electrical connections must also be undone for complete removal (solenoid actuator replacement).
If only the solenoid (702) is being replaced, it can be removed from the magnetic housing (103) with the magnetic disk (500).

NOTICE!
Prior to assembly or if the sealing elements are damaged

- with solenoid actuator MG 004 - 20.1:
  Magnet housing cover (105*), insulating sleeve (401*) and gasket (402*)
- with solenoid actuator flow-control-butterfly-valve / main volume:
  Replace magnet housing cover (105xx), O-ring (403xx) and gasket (402xx)

if necessary

Assembly takes place in reverse order.

Tightening torques for the connecting bolt (501) and the hexagon bolt (900).

Tightening torque Item 501 + 900	Thread size
4.6 Nm	M6
11 Nm	M8
22 Nm	M10
62 Nm	M14

8.0 Explanations on codes and directives

The Commission of the European Union has laid down common directives resp. regulations for the free trading of goods within the Union specifying minimum requirements for safety and health protection. The CE symbol confirms that products comply with the EU directives resp. regulations, i.e. in conformity with the relevant, in particular harmonised standards.

Notes concerning directive 2014/34/EU (ATEX directive):
The solenoid actuators in the MG...Xn and MG...A...Xn series fulfil the relevant requirements of directive 2014/34/EU; they are therefore marked with the CE mark in accordance with Appendix II of the directive. The declaration of conformity is enclosed.

Notes concerning directive 2014/35/EU (Low Voltage Directive):
The solenoid actuators (MG..., MG...A) have been developed, designed and manufactured in accordance with the "Electromagnetic devices" standard DIN VDE 0580. This also fulfils the requirements of the Low Voltage Directive, which applies to nominal voltages of
50 to 1000V AC and 75 to 1500V DC.

Note concerning directive 2014/30/EU (EMC directive):
The solenoid actuators fulfil the requirements of the product family standards to be used in the industrial sector and also in the residential, business and commercial sectors as well as in small businesses. When AC and DC versions are being used, the user must provide a suitable line filter
(e.g. X-capacitor 47 nF) at the power supply input in order to attenuate the physically-related cable-bound switch-off interference of the solenoid. Solenoid actuators as drive elements for valves do not represent independently operating devices in the sense of the EMC directive, and are only subjected to further processing or installed into a machine by specialist companies. Starting up is not allowed until it has been established that the entire machine or system complies with the provisions of the EMC directive.

Operating manual

9.0 Drawing

Standard solenoid actuator IP 54

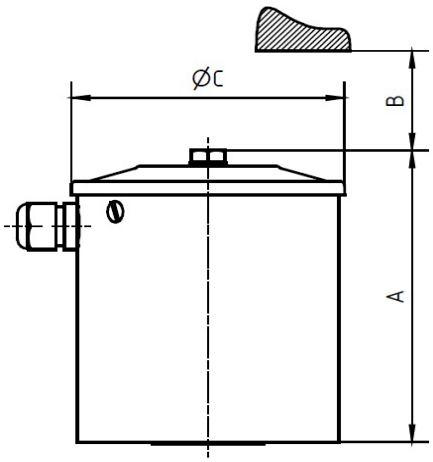

Standard solenoid actuator IP 65*

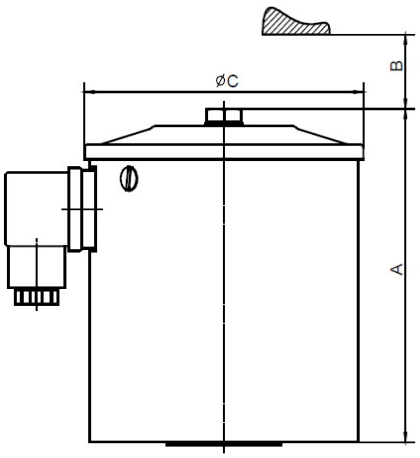

* Cast with casting resin

Solenoid actuator Harting connector HAN 7D / 8D optionally available

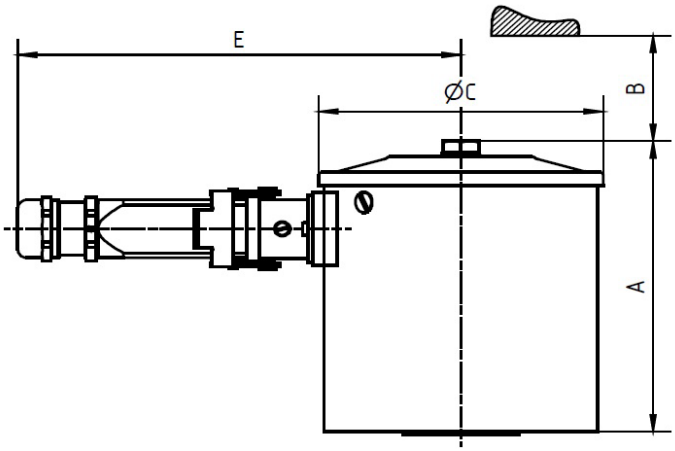

Solenoid actuator MG…A with external controller RKS 5-1500 / RKS 5-4000

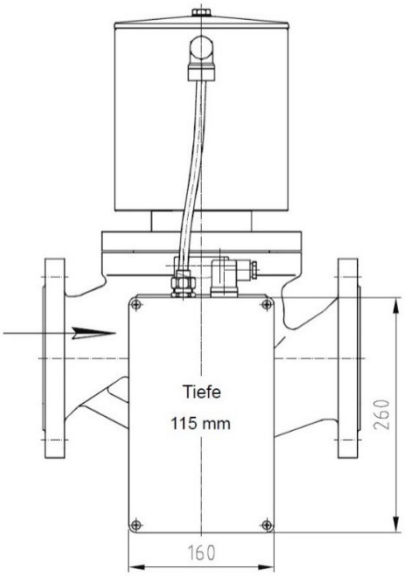

Operating manual

Dimensions

Type MG...	A	B	ØC	D	E	Weight in kg	
						IP 54	IP 65
004	100	60	80	-	160	1.6	1.7
005	100	60	80	-	160	1.6	1.7
008	120	73	102	-	171	3.2	3.5
010 (A)	159	88	127	-	184	6.0	7.0
012 (A)	159	97	127	-	184	6.6	7.2
014 (A)	201	120	153	-	197	10.5	11.7
016 (A)	201	134	153	152	197	11.7	12.5
018 (A)	223	152	194	171	216	19.0	22.2
019 (A)	223	152	194	171	216	21.3	24.5
020(.1) (A)	256	182	230	-	235	36.3	40.0

Option Rain protection cover

Standard series MG

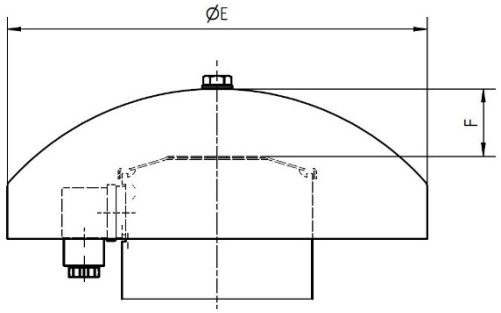

Ex-series for MG...Xn - version

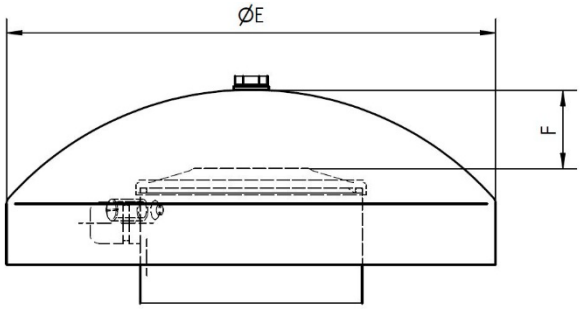

Size	ØE	F	MG…(A)…, MG…Xn…	Size	ØE	F	MG…(A)…, MG…Xn…
1	170	50	004, 005	3	260	64	014(A), 016(A)
2	220	56	008, 010(A), 012(A)	4	370	50	018(A), 019(A), 020(.1) (A)