Uni-Geräte E. Mangelmann
Elektrotechnische Fabrik GmbH
Holtumsweg 13, 47652 Weeze, Germany

Gefördert durch:
Bundesministerium für Wirtschaft und Energie
aufgrund eines Beschlusses des Deutschen Bundestages

Operating manual

Solenoid-Actuator

Series MA...

Not explosion proof

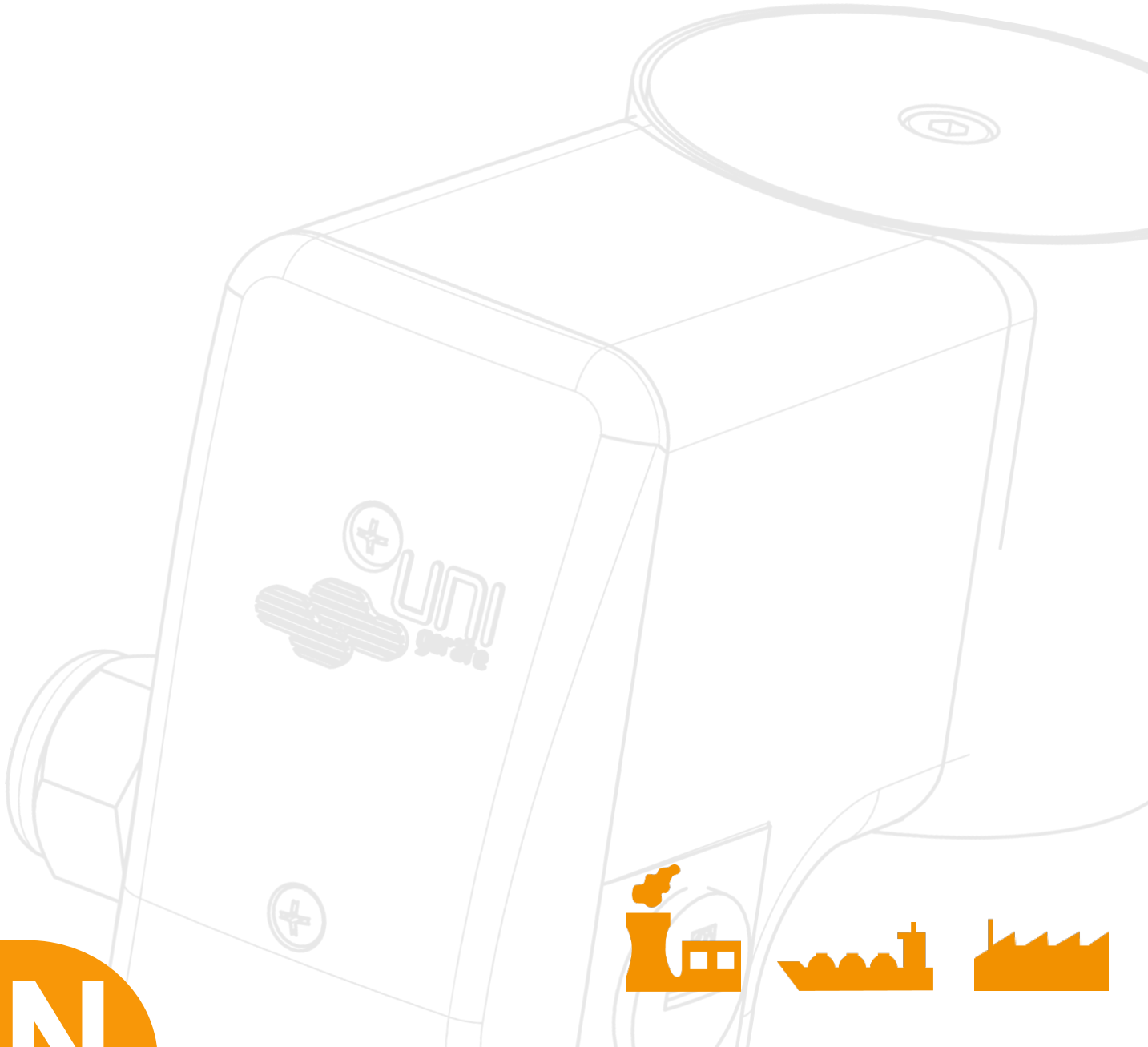

EN

+49 (0) 2837/9134-0 info@uni-geraete.com www.uni-geraete.com

Gefördert durch:
Bundesministerium für Wirtschaft und Energie
aufgrund eines Beschlusses des Deutschen Bundestages

Operating manual

Contents

1.0 General remarks
1.1 Solenoid actuator data

2.0 Electrical connection

3.0 Operation

4.0 Solenoid actuators
4.1 MA…

5.0 Protective conductor connection

6.0 Dismantling of the solenoid actuator

7.0 Explanations on codes and directives

8.0 Drawing

1.0 General remarks

Valve / solenoid actuator combinations are delivered fully assembled and tested as standard. **Additionally, the adeqaute operating instructions of each special fitting-series must be considered.** When solenoid actuators are replaced or changed, it must be ensured that combination with a Uni-fitting is approved and that the magnet is properly attached to the fitting (e.g. with the permissible tightening torque). The device-specific serial number and the year of manufacture can be found on the nameplate for clear identification.
Solenoid actuators are electrotechnical components which cannot be operated without an associated fitting, and may not be operated on their own!
Always use solenoid actuators with IP65 with a rain protection cover for outdoor installations. Solenoid actuators which are obviously damaged must not be installed and must be replaced. If the solenoid actuators are exposed to special types of external stress, additional protective measures are required and must be provided by the operator. Uni Geräte does not accept liability for damage (to the device / beyond) caused by modification(s) to the device.
The same applies to warranty claims.

1.1 Solenoid actuator data

Manufacturer:
Uni-Geräte E. Mangelmann Elektrotechnische Fabrik GmbH
Holtumsweg 13, 47652 Weeze, Germany

Designation:
Series MA… not explosion proof

Protection type	IP65
Medium temperature:	-20 °C to +60 °C
Ambient temperature:	-20 °C to +60 °C
Duty cycle:	100 %
Mains frequency for AC version:	40 to 60 Hz

Description of the device
The solenoid actuator (pot magnet) is used as a drive unit for valves. The solenoid actuator is designed in the form of a magnetic housing (pipe, base and cover), a coil and electronics. Depending on the version, the solenoid actuator can be operated with direct or alternating voltage. A rectifier is built into the AC voltage version. The various types of coil therefore always have direct current flowing through them when they are live. The internal built-in controller switches over after a defined time from the pickup operation (high power / high magnetic force) to the holding operation (low power / low magnetic force). In this way the solenoid actuators operate extremely energy efficient and economical in continuous duty.

2.0 Electrical connection

- The diameter range / clamping range of the cable gland must be observed and adhered to.
- When flexible connecting cables are being used, insulated wire end sleeves with plastic collars in accordance with DIN 46228-4 must be used.
- The supply voltage at the solenoid actuator must be within the range of -15% to + 10% of the nominal voltage. Connection plan "AP xx", which applies to the selected version of the solenoid actuator, must be taken into consideration for the connection.
- The terminal box cover must be reassembled with care in order to guarantee the IP protection class. Versions which are delivered with a connecting cable from the factory are ready for use, i.e. the terminal compartment does not need to be opened.
- The solenoid actuators must be protected against the dangerous effects of short circuits, earth faults and overloading. Upstream protective devices must be of a type which prevents automatic restarting under fault conditions. Their rated voltage must be equal to or greater than the nominal voltage of the solenoid actuator. Their breaking capacity must be equal to or greater than the maximum short-circuit current which can be assumed at the installation site (usually 1500 A).
- An upstream fuse may be used for protecting the device. In that case, it must be rated with a maximum of 3 times the nominal current of the solenoid actuator (in accordance with IEC 60127-1). If the rated current is very small, the fuse with the smallest current value in accordance with the specified IEC standard must be selected. For the dimensioning of the fuse the pull-in current has to be taken into consideration.
- Alternatively, an upstream motor protection switch with overload and short-circuit tripping may be used. It must be set to the nominal current of the solenoid actuator. Based on its characteristic curve, the motor protection switch must be set so that it trips after 10…20 s with a pull-in current.

3.0 Operation

100% duty cycles are also permitted at the maximum ambient temperatures.



DANGER!
The solenoid actuator may become hot during operation. Risk of injury when touched!

During operation, it must be ensured that neither the maximum permissible ambient and medium temperature nor the maximum permissible supply voltage level are exceeded. All solenoid actuators are wired with a protective measure to reduce the induction voltage. To avoid potentially damaging induction voltage, the user must take suitable measures that go beyond the built-in protective measures if necessary.

4.0 Solenoid actuators

4.1 MA...

Type MA...	P* W		Nominal current A					
			24V DC		110V AC		230V AC	
	Pickup	Holding	Pickup	Holding	Pickup	Holding	Pickup	Holding
020-P3	100	10	4,17	0,42	1,00	0,10	0,49	0,05
040-P1	72	8	3,00	0,33	0,72	0,08	0,35	0,04
040-P2	110	11	4,58	0,46	1,10	0,11	0,54	0,05
040-P3	200	20	8,33	0,83	2,00	0,20	0,98	0,10
050-P1	147	15	6,13	0,63	1,47	0,15	0,72	0,07
050-P2	190	19	7,92	0,79	1,90	0,19	0,93	0,09
060-P1	500	70	20,83	2,92	5,00	0,70	2,44	0,34

* Rated power

Type MA...	Control device			maximum switching frequency	Connection plan
	24V DC	110V AC	230V AC		
020-P…	PS 200			300 switching operations / hour	DC: AP 01 AC: AP 02
040-P…				600 switching operations / hour	
050-P…					
060-P…	TS 900	TS 1500		20 switching operations / hour	AC or DC: AP 03

Operating manual

Connection plan with PS 200

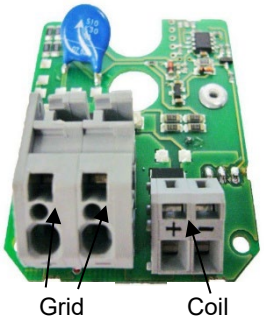

AP 01: DC version

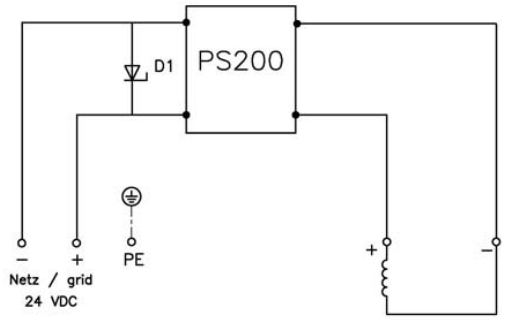

AP 02: AC version

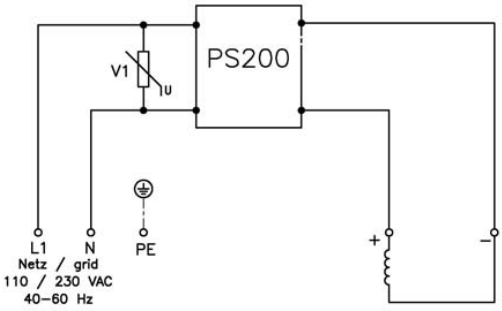

Connection plan with TS 900 / TS 1500

TS 900



TS 1500



AP 03: AC or DC version

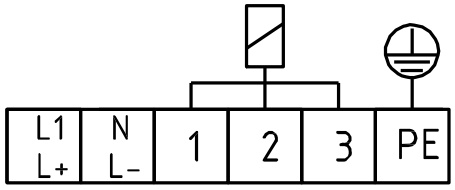

5.0 Protective conductor connection

The solenoid actuator must always be integrated into the equipotential bonding. A connection option is available for this purpose in the connection terminal area in the terminal box.

6.0 Dismantling of the solenoid actuator

The solenoid actuator must be taken out of operation before dismantling.



DANGER!
The solenoid actuator may become hot during operation. Risk of injury when touched!



DANGER!
De-energize the terminal box before opening it!
Observe the electrical safety rules!
The device may only be connected by a qualified electrician!

Solenoid actuator MA020

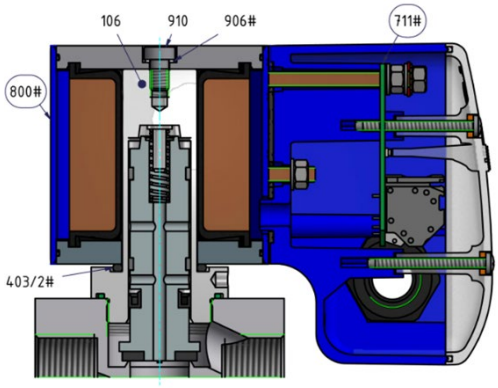

Solenoid actuator MA040, MA050, MA060

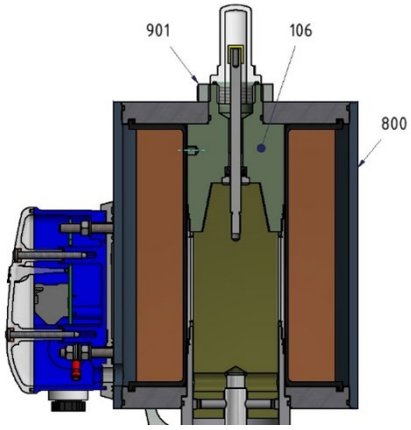

O = Spare part kit

(…#) supplied as a complete unit

Item	Description
106	upper part of housing
403/2	O-ring
711	printed circuit board
800	solenoid drive
901	hex. nut
906	washer
910	cylinder head screw

MA20: Loosen cylinder head screw (910), remove the solenoid drive (800) with washer (906) from the upper part of housing (106).

MA40, MA50, MA60: Loosen hex. nut (901) and remove the complete solenoid drive (800) from upper part of housing (106).

Type MA…	Item	Tightening torque	Thread
020-P…	910	10Nm	M6
040-P…	901	50Nm	M30
050-P…	901	50Nm	M30
060-P…	901	50Nm	M30

7.0 Explanations on codes and directives

The Commission of the European Union has laid down common directives resp. regulations for the free trading of goods within the Union specifying minimum requirements for safety and health protection. The CE symbol confirms that products comply with the EU directives resp. regulations, i.e. in conformity with the relevant, in particular harmonised standards.

Notes concerning directive 2014/35/EU (Low Voltage Directive):
The solenoid actuators (MA...) have been developed, designed and manufactured in accordance with the "Electromagnetic devices" standard DIN VDE 0580. This also fulfils the requirements of the Low Voltage Directive, which applies to nominal voltages of
50 to 1000V AC and 75 to 1500V DC.

Note concerning directive 2014/30/EU (EMC directive):
The solenoid actuators fulfil the requirements of the product family standards to be used in the industrial sector and also in the residential, business and commercial sectors as well as in small businesses. When AC and DC versions are being used, the user must provide a suitable line filter
(e.g. X-capacitor 47 nF) at the power supply input in order to attenuate the physically-related cable-bound switch-off interference of the solenoid. Solenoid actuators as drive elements for valves do not represent independently operating devices in the sense of the EMC directive, and are only subjected to further processing or installed into a machine by specialist companies. Starting up is not allowed until it has been established that the entire machine or system complies with the provisions of the EMC directive.

8.0 Drawing

Solenoid actuator MA020

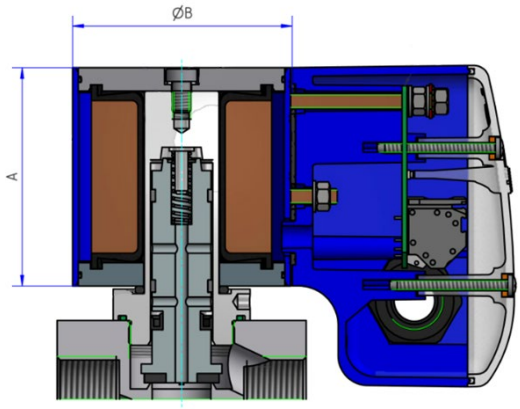

Solenoid actuator MA040, MA050, MA060

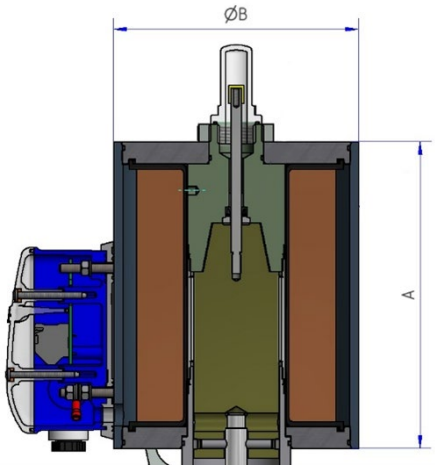

Dimensions

Type MA...	A	B	Weight in kg IP 65
020-P…	70	70	1,4
040-P…	135	110	5,9
050-P…	170	135	11,5
060-P…	213	160	20,3